umerc + METS

Design and Modeling of the Laboratory Upgrade Point Absorber Wave Energy Converter

Tuesday, September 13th, 2022

Courtney Beringer

Bret Bosma, Bryson Robertson

Raise your hand if you do experimental testing

Raise your hand if you **want** to do experimental testing or **use** experimental data

- Time
- Money
- Resources
- Personnel

Motivations

- Open-Source
- Modular
- Lessons Learned

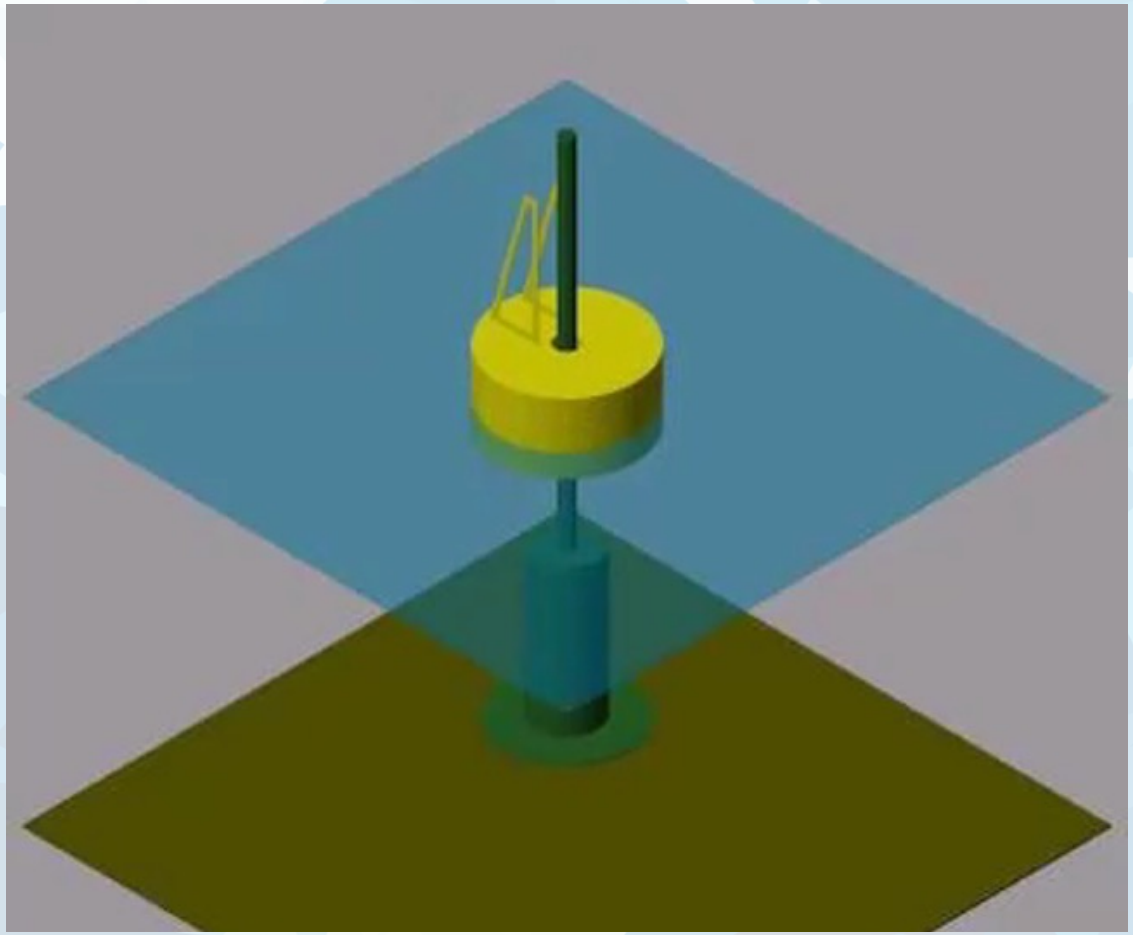

Two-body point absorber

Laboratory **U**pgrade **P**oint **A**bsorber

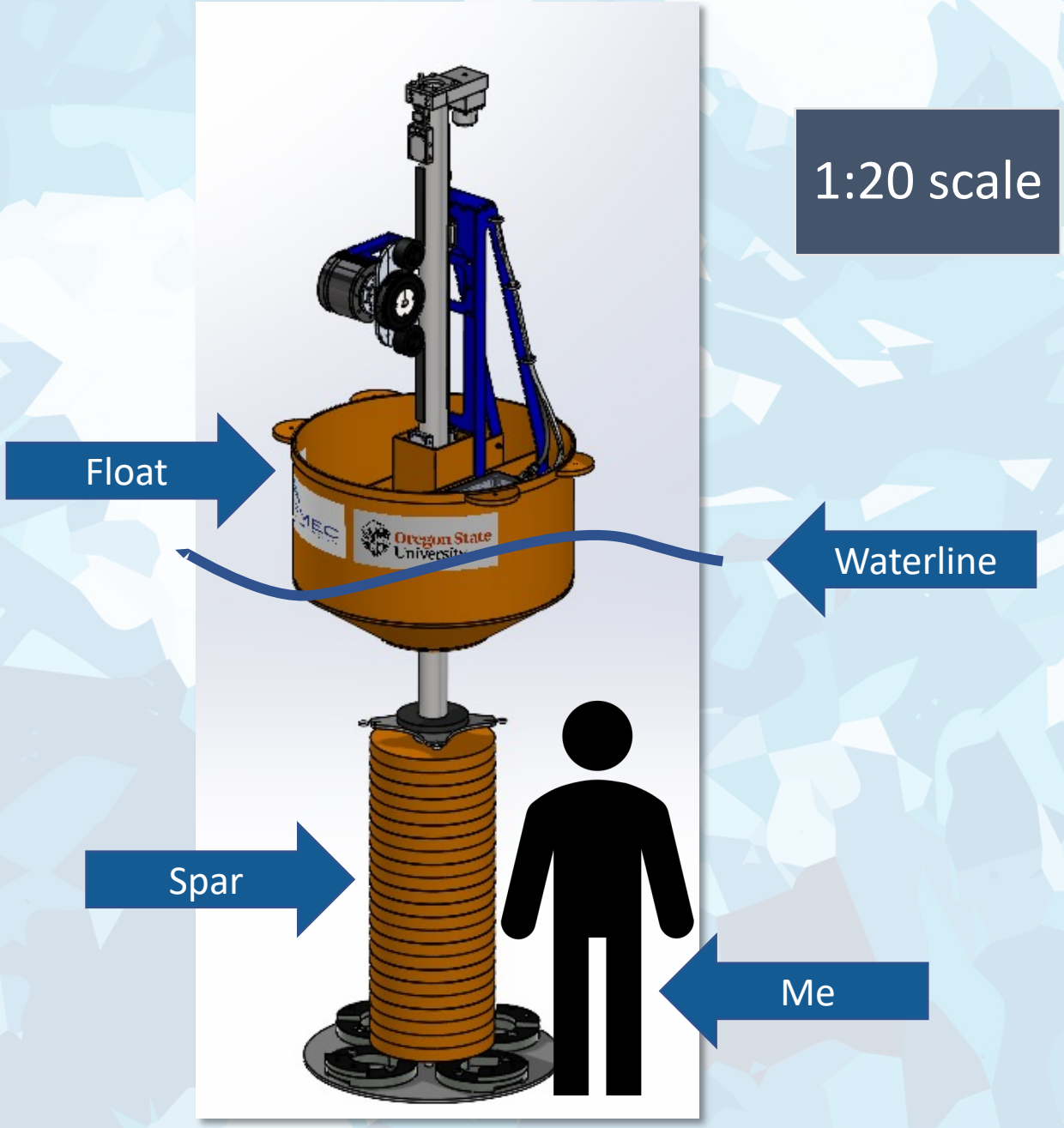

Open-Source

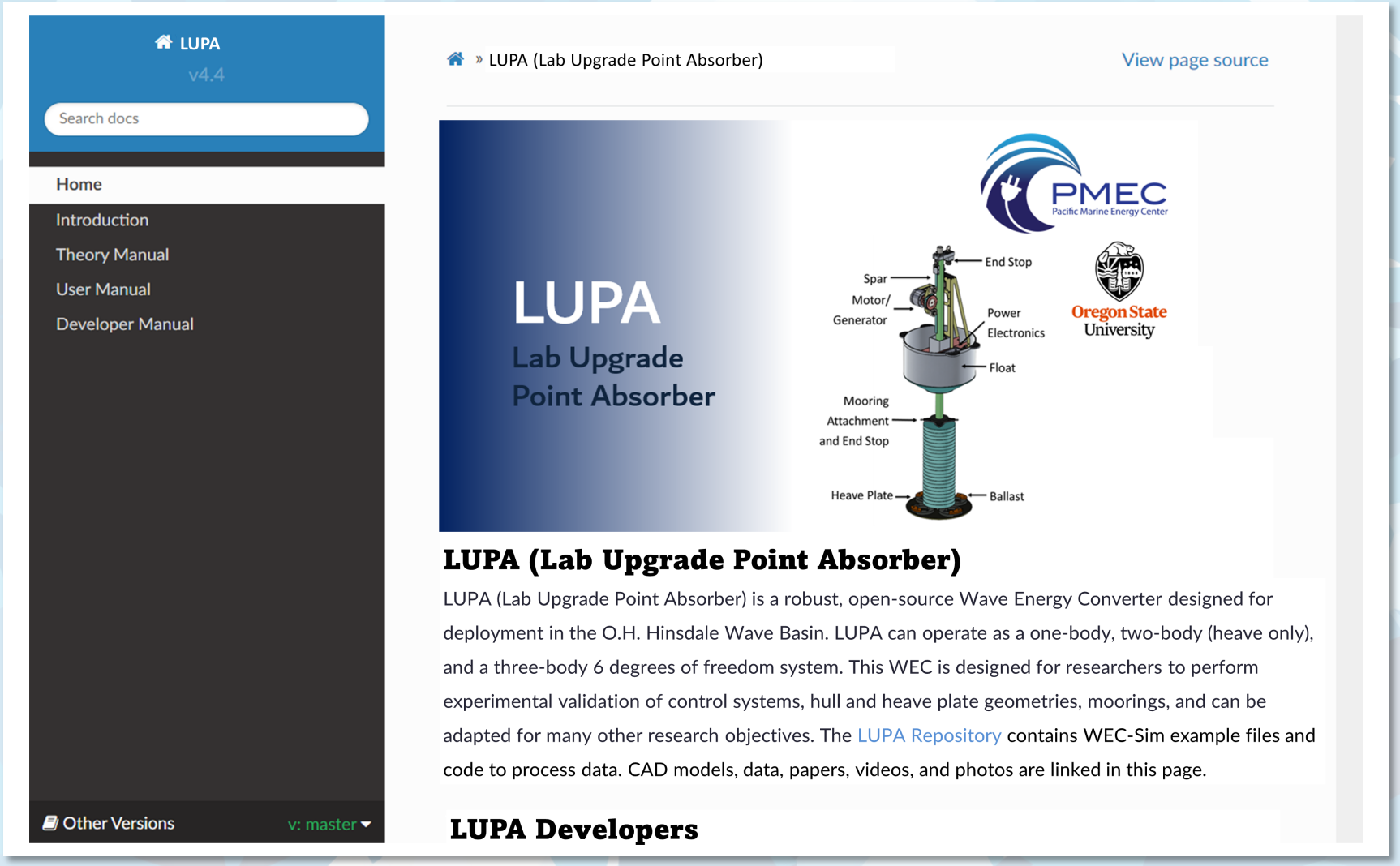

https://pmec-osu.github.io/LUPA/

Modular

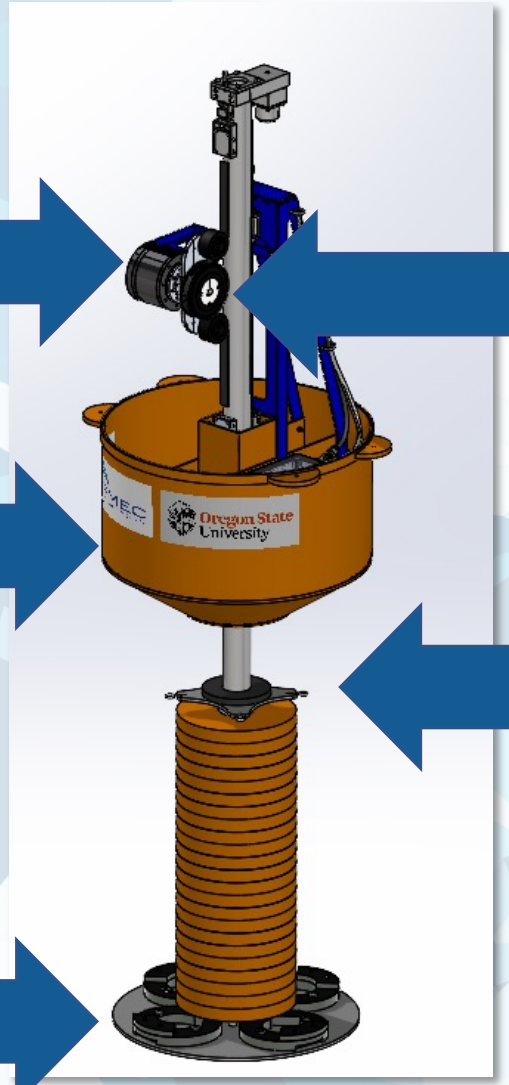

Generator controls

Gear ratio

Float geometry

Mooring configuration

3 modes of operation

Heave plate geometry

Modular

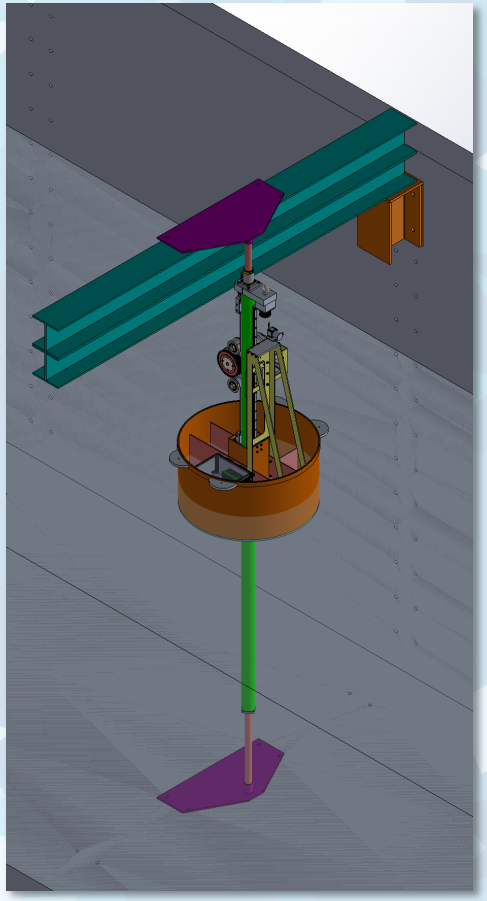

One-body heave only

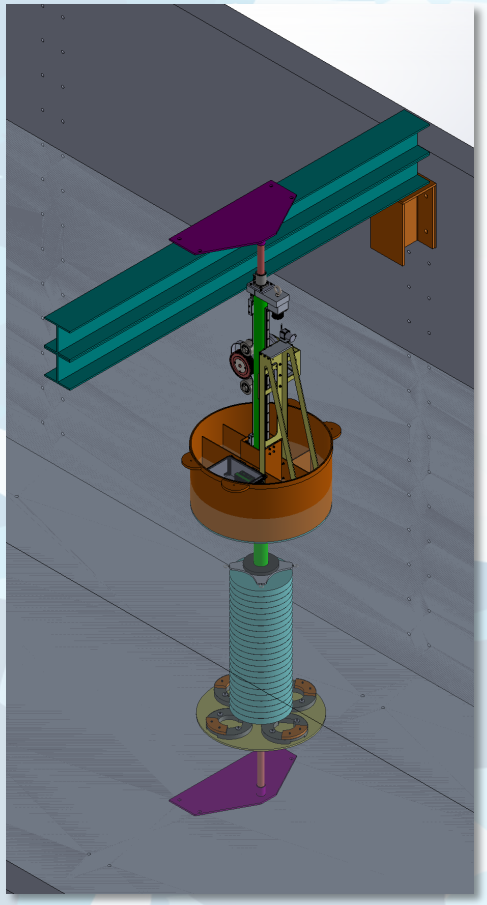

Two-body heave only

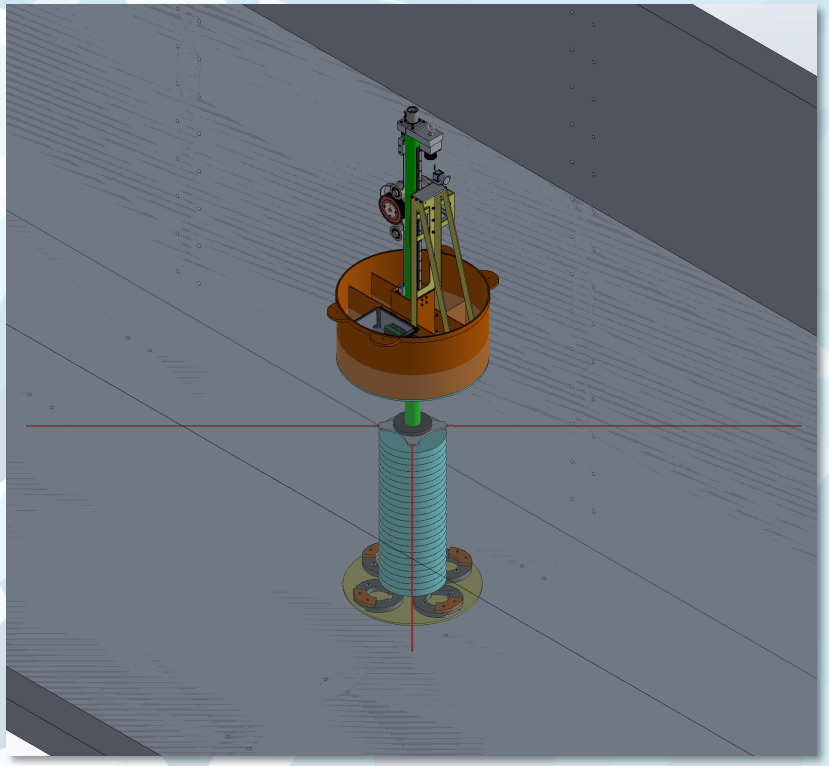

Six degrees of freedom

Lessons Learned

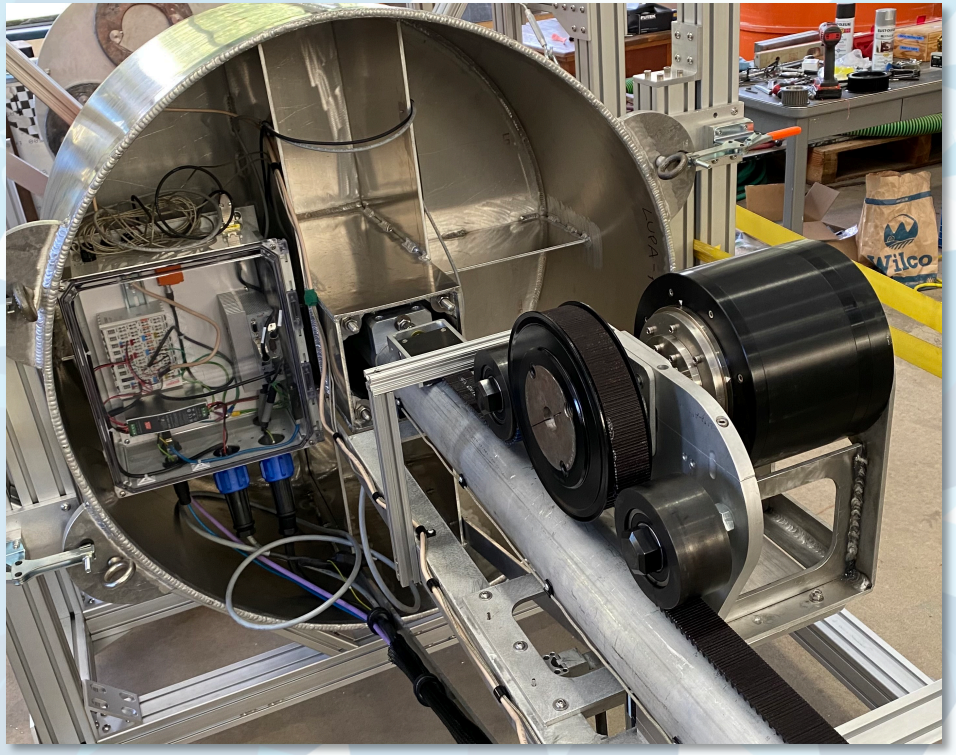

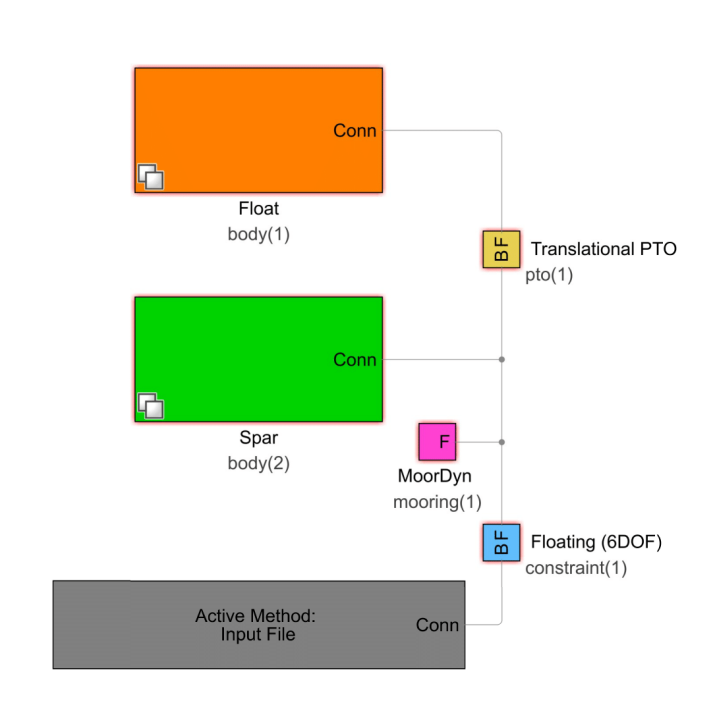

Minimizing Friction

Sizing Components

Model Tank Mooring

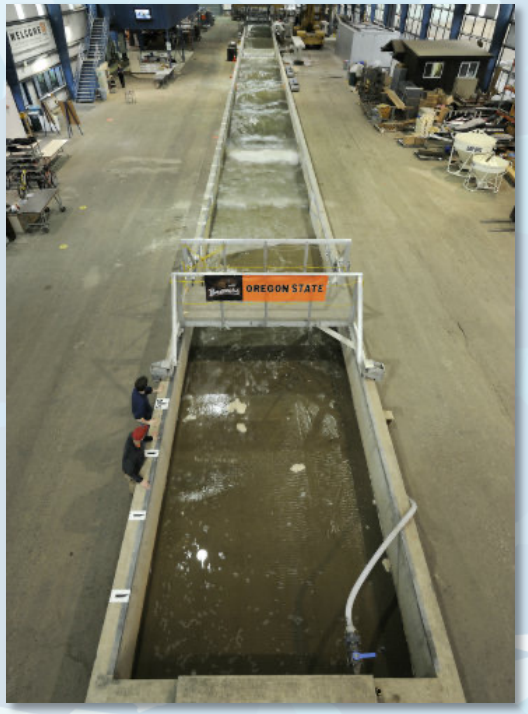

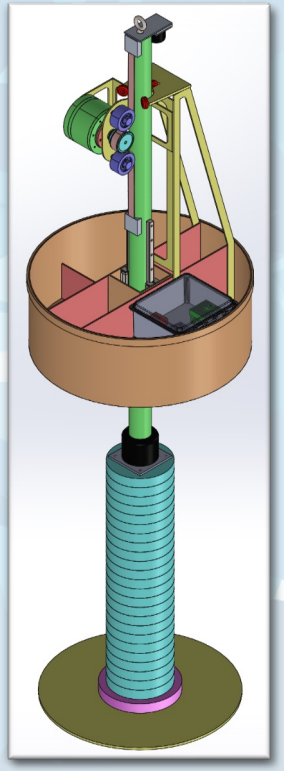

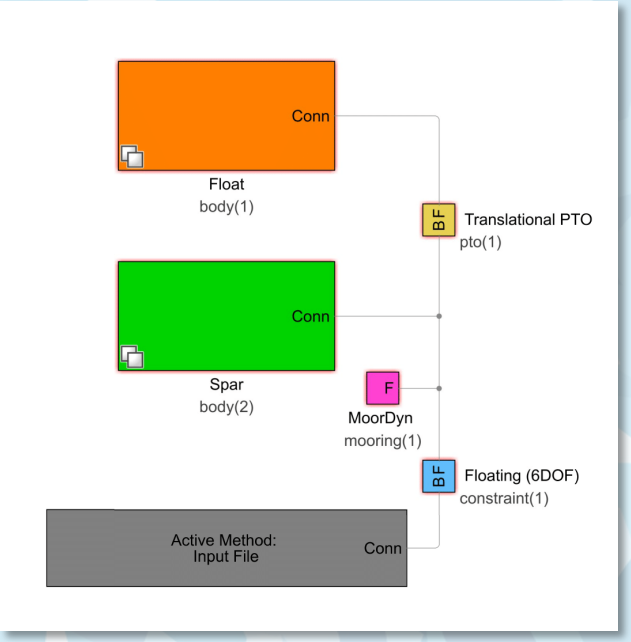

Concept development → Design iterations → Field expert feedback → Build device → Test & validate models

2020 | 2021 | 2022

One-body heave only

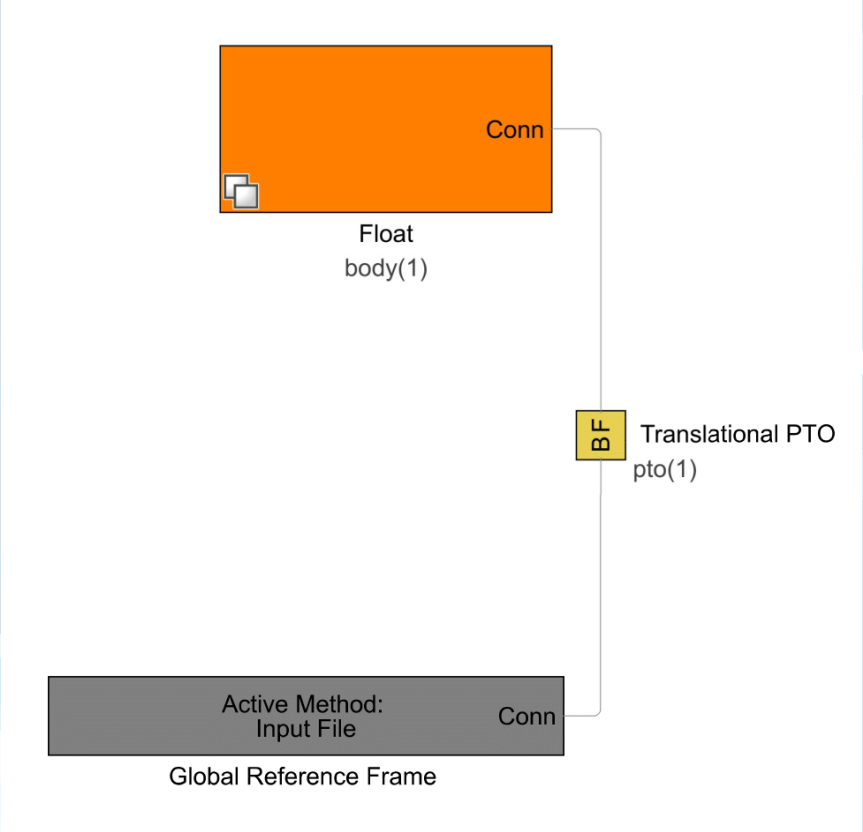

WEC-Sim Simulink

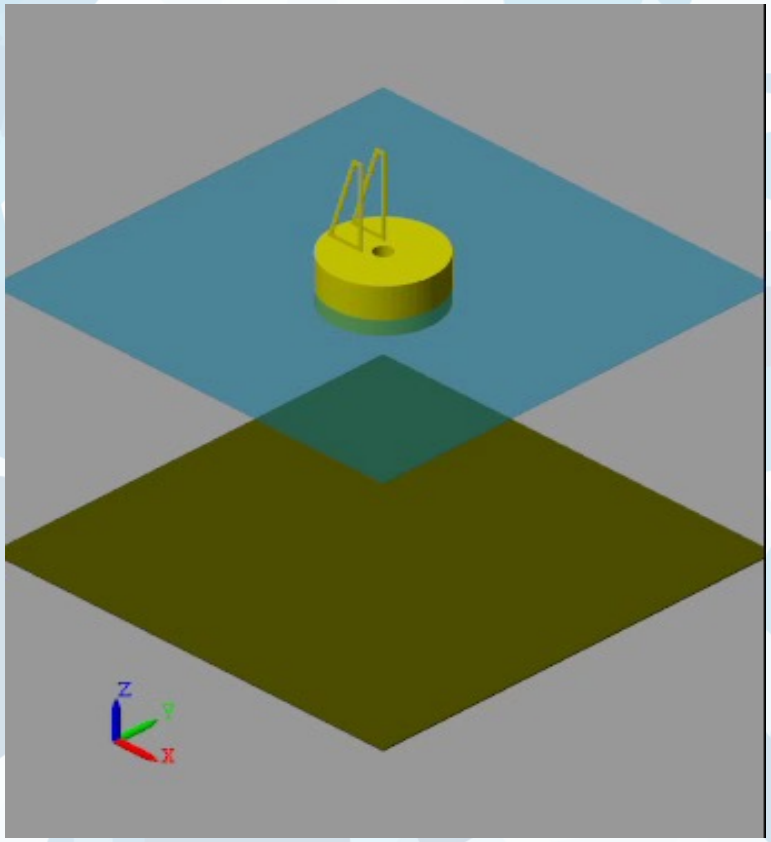

WEC-Sim Visualizer

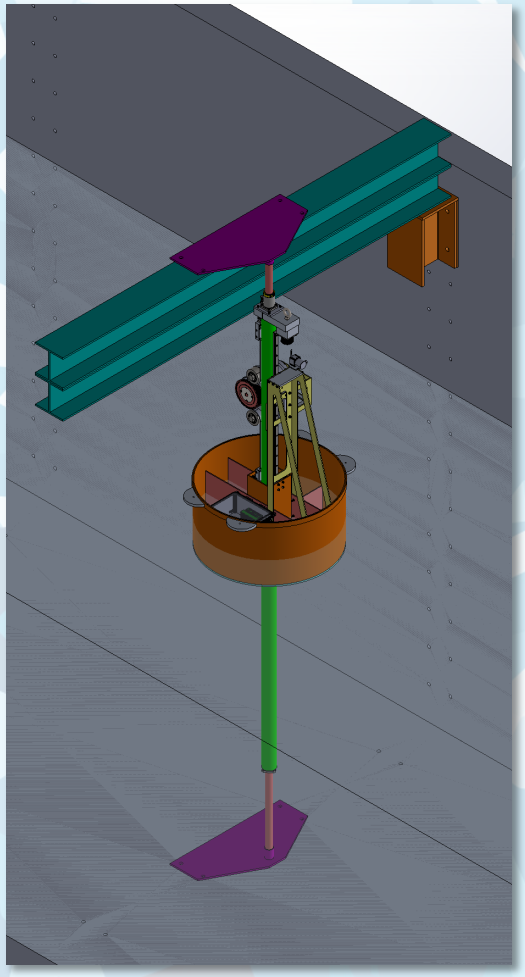

Two-body heave only

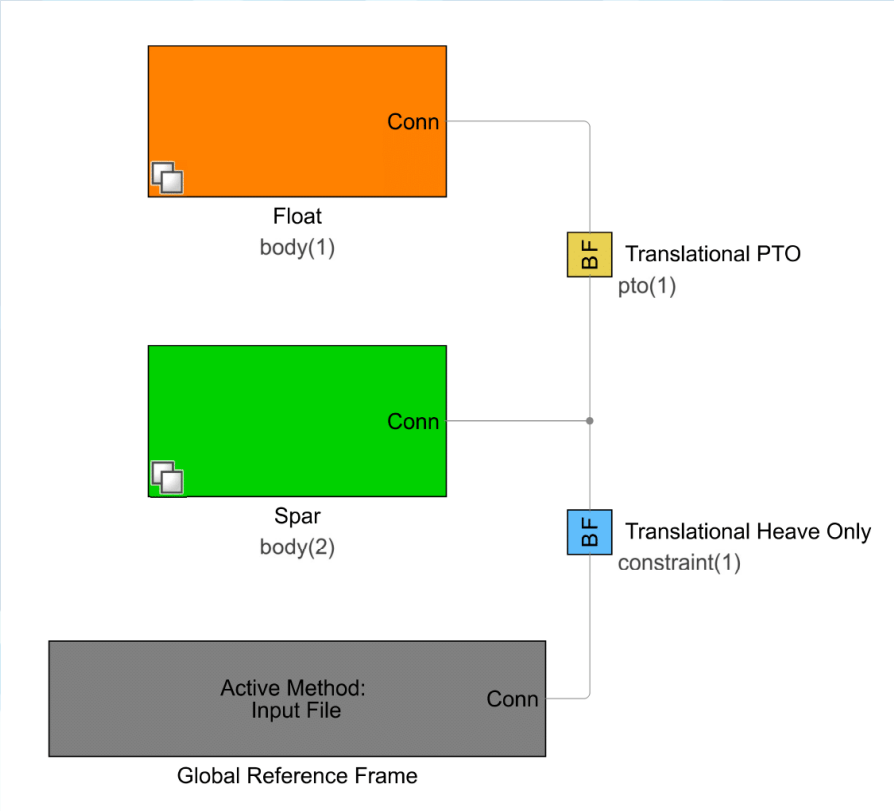

WEC-Sim Simulink

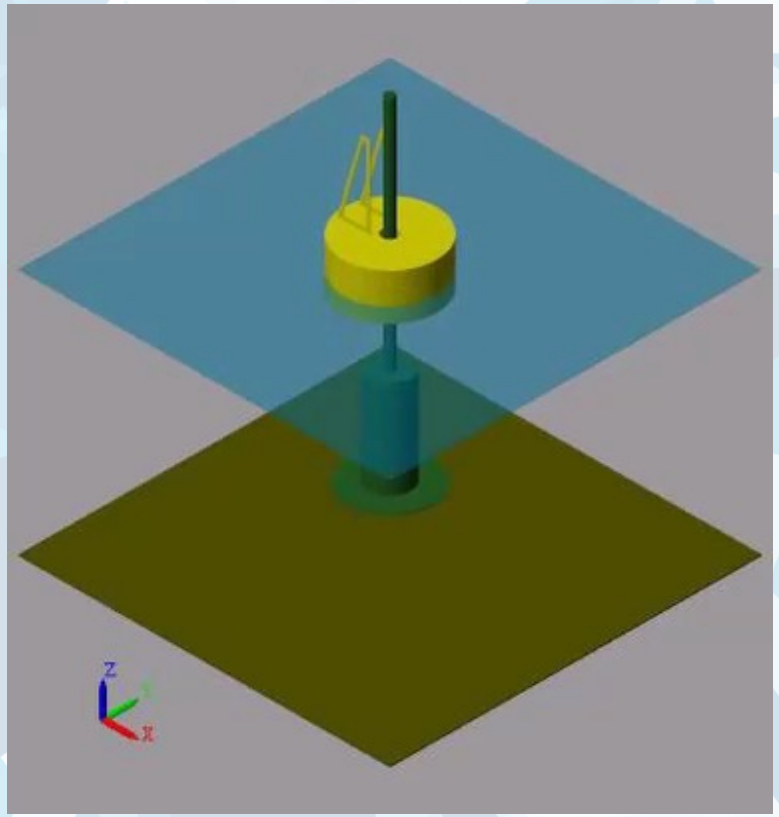

WEC-Sim Visualizer

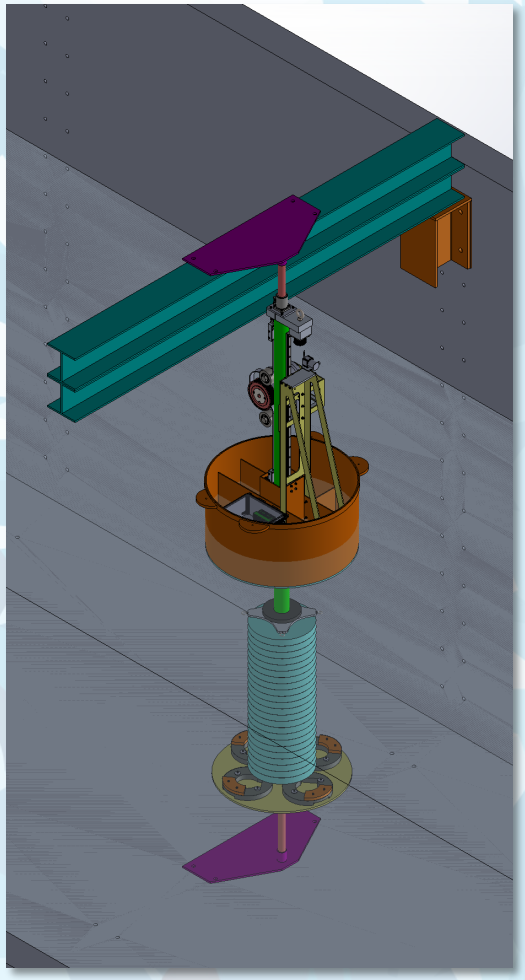

Six degrees of freedom

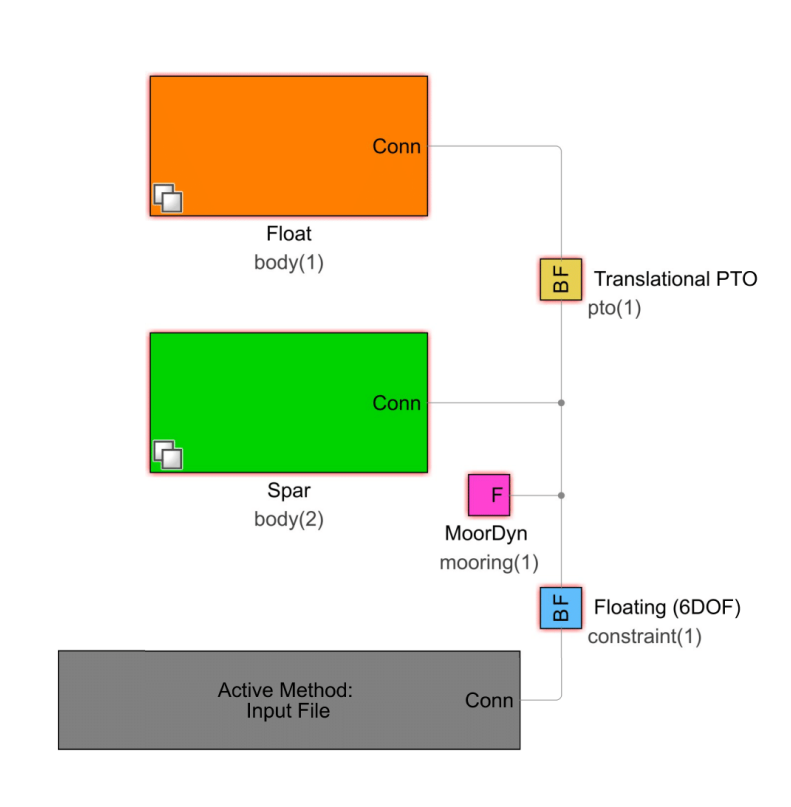

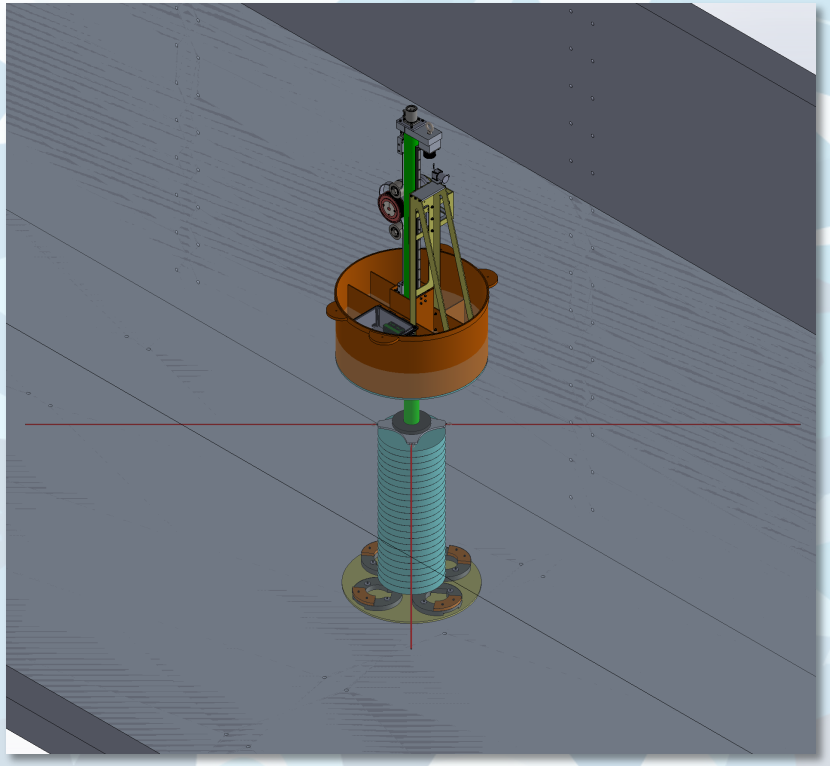

Moor-Dyn WEC-Sim Simulink

Also available in
Mooring Matrix and Cable Block

Numerical Results

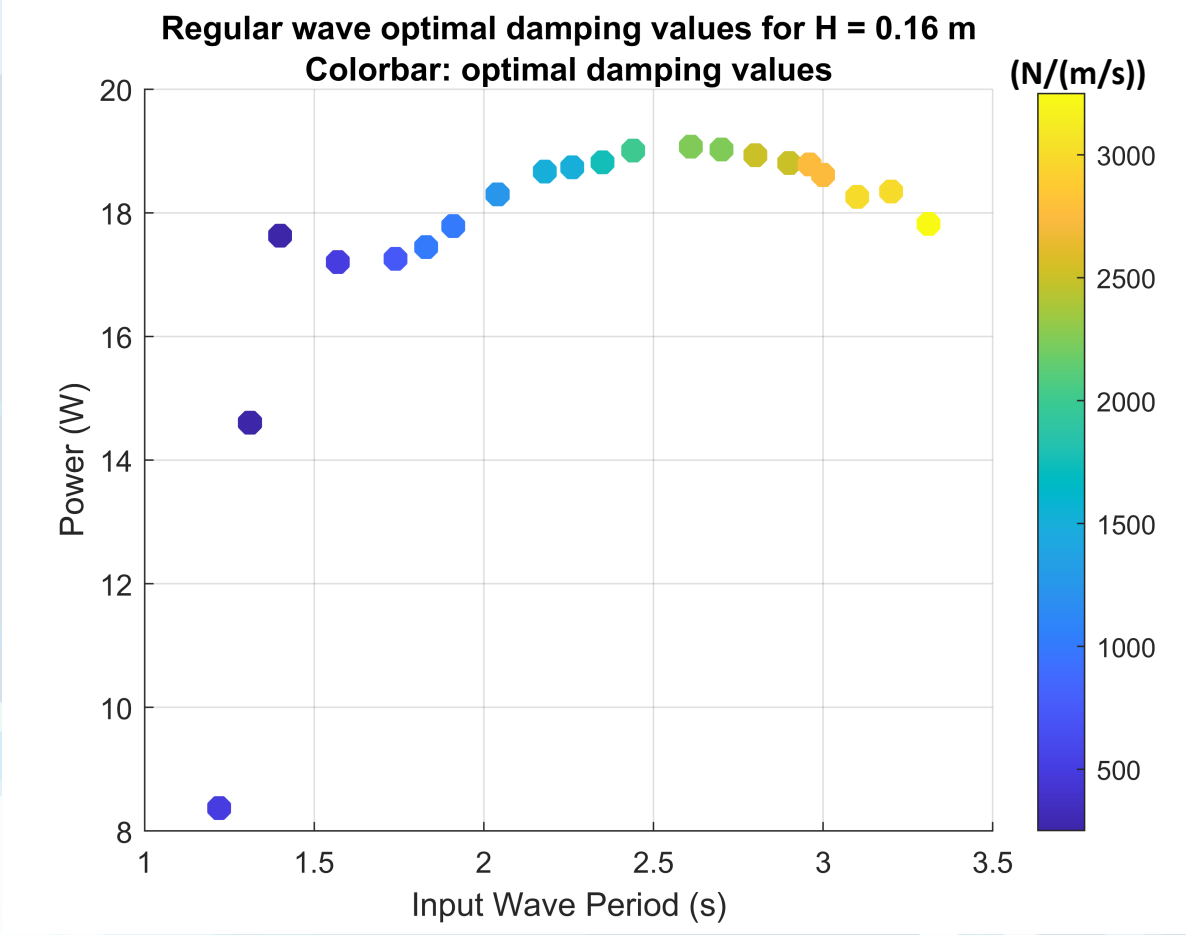

One-body heave only

Numerical Results

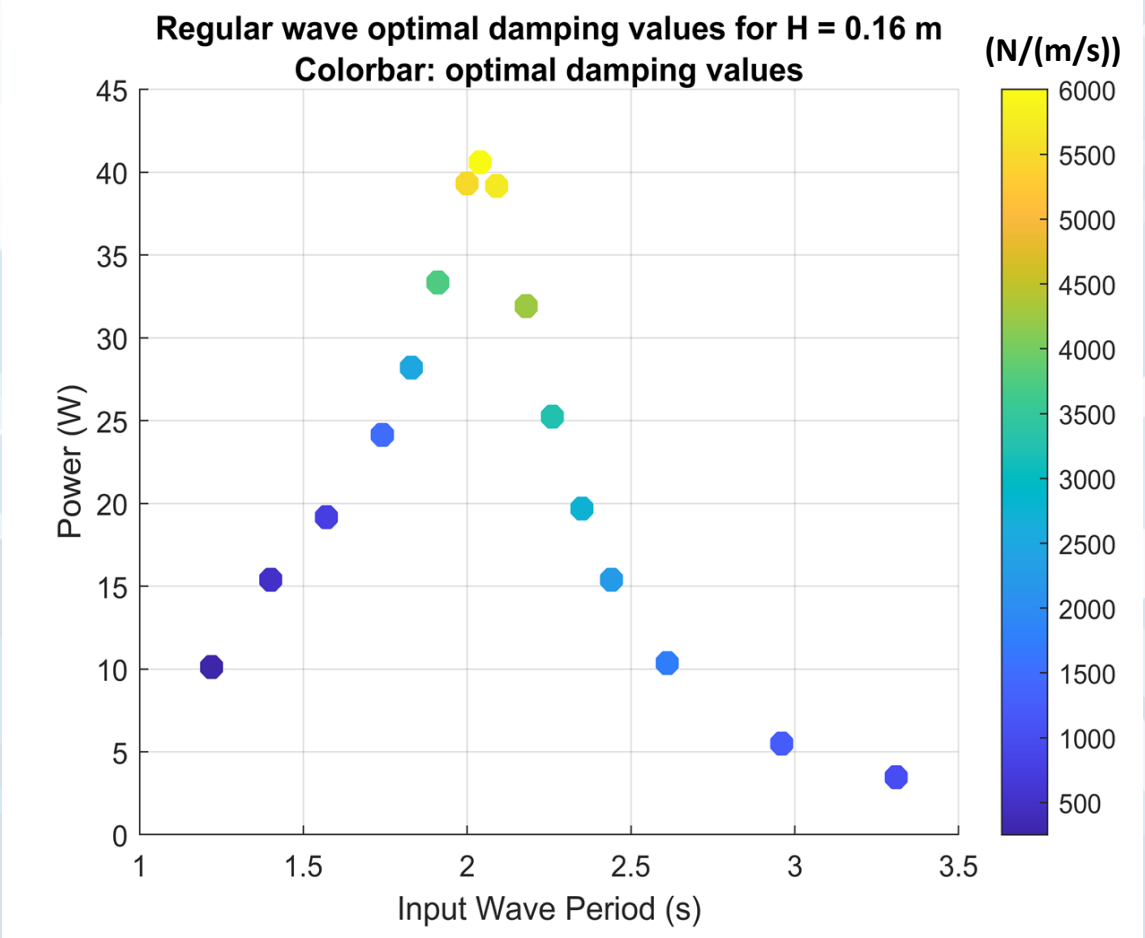

Two-body heave only

Numerical Results

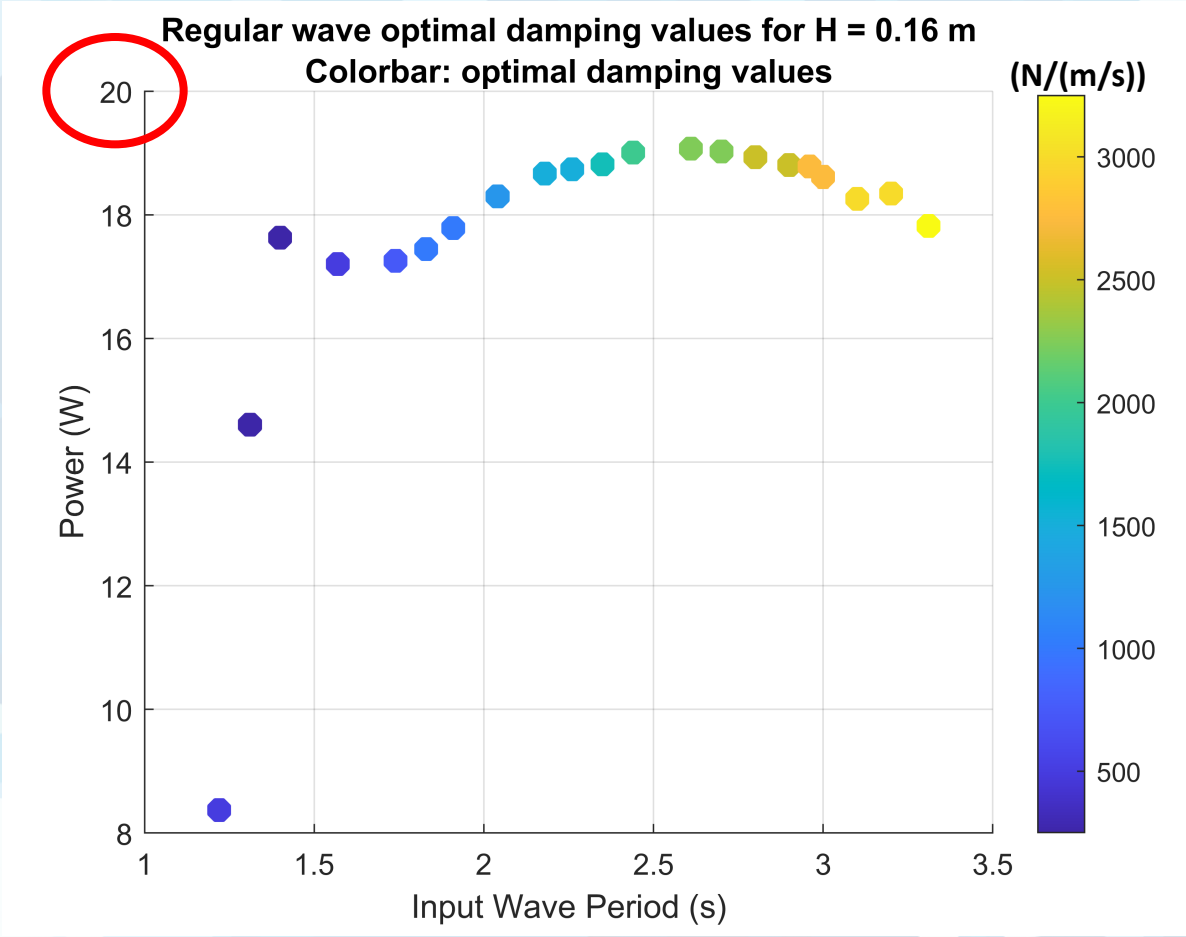

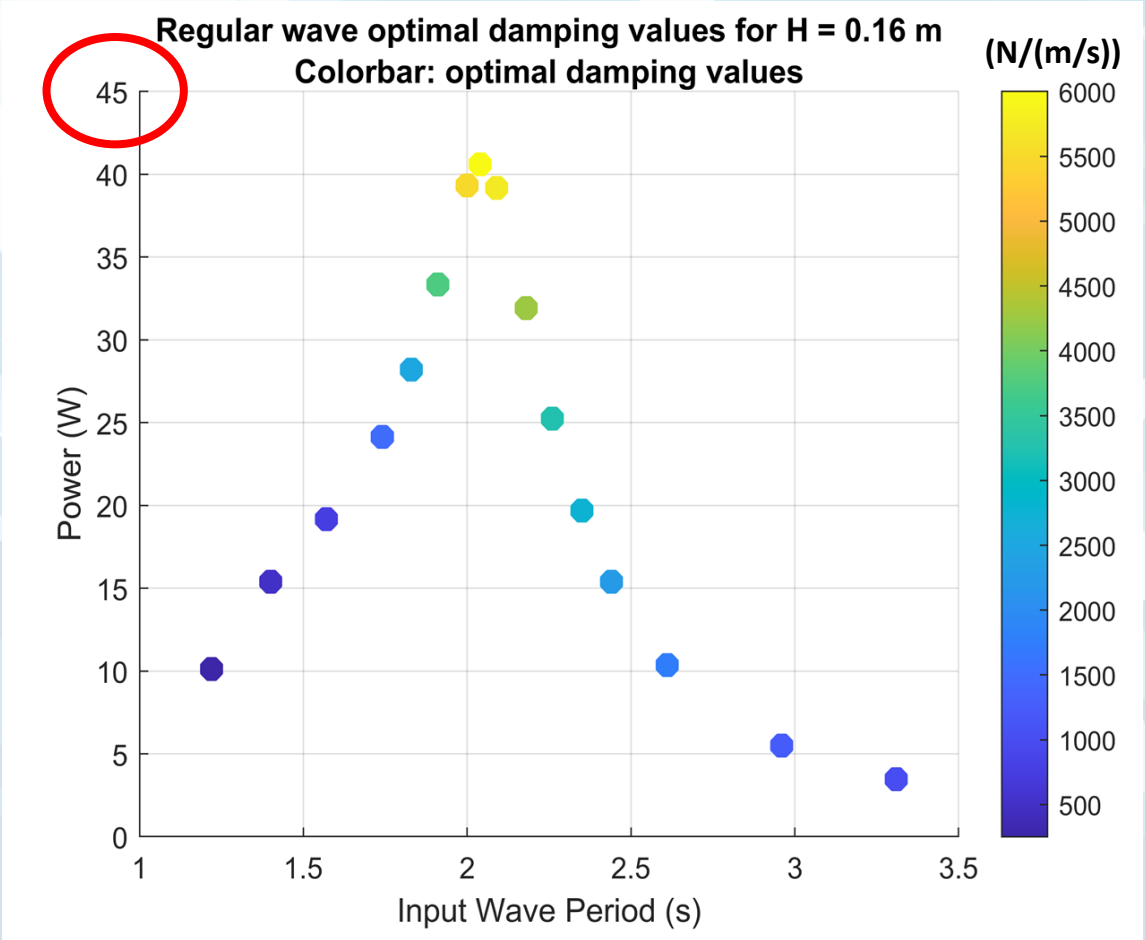

One-body heave only

Two-body heave only

Numerical Results

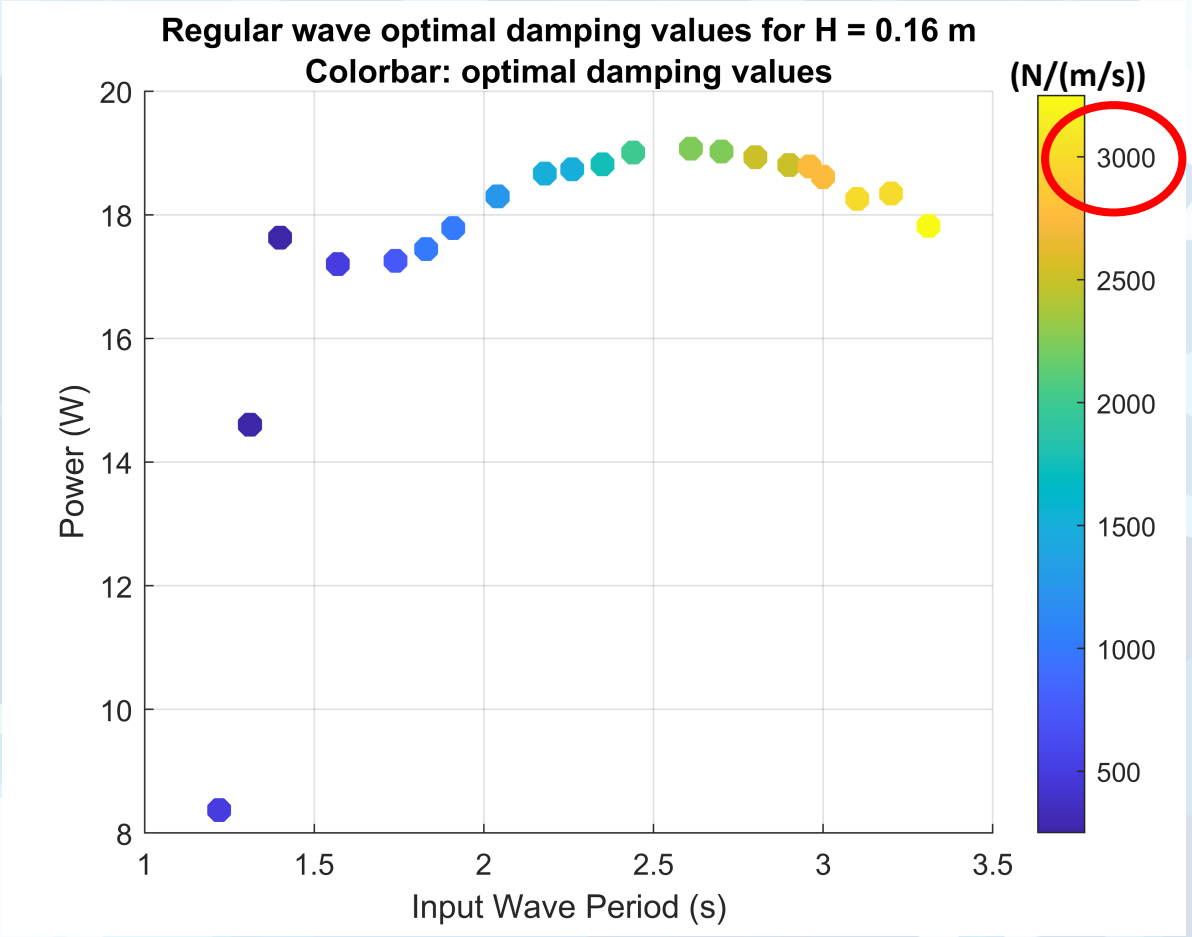

One-body heave only

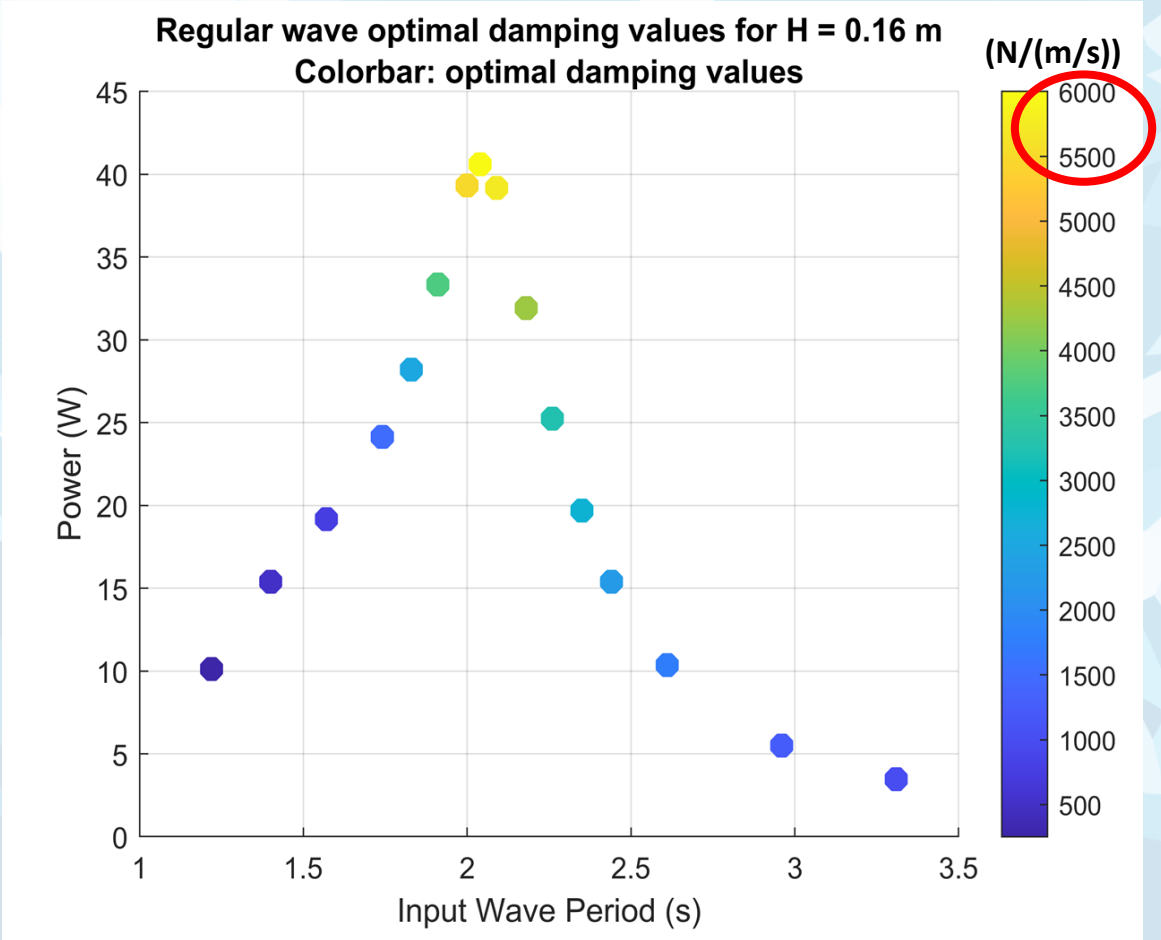

Two-body heave only

Six Degrees of Freedom Numerical Results

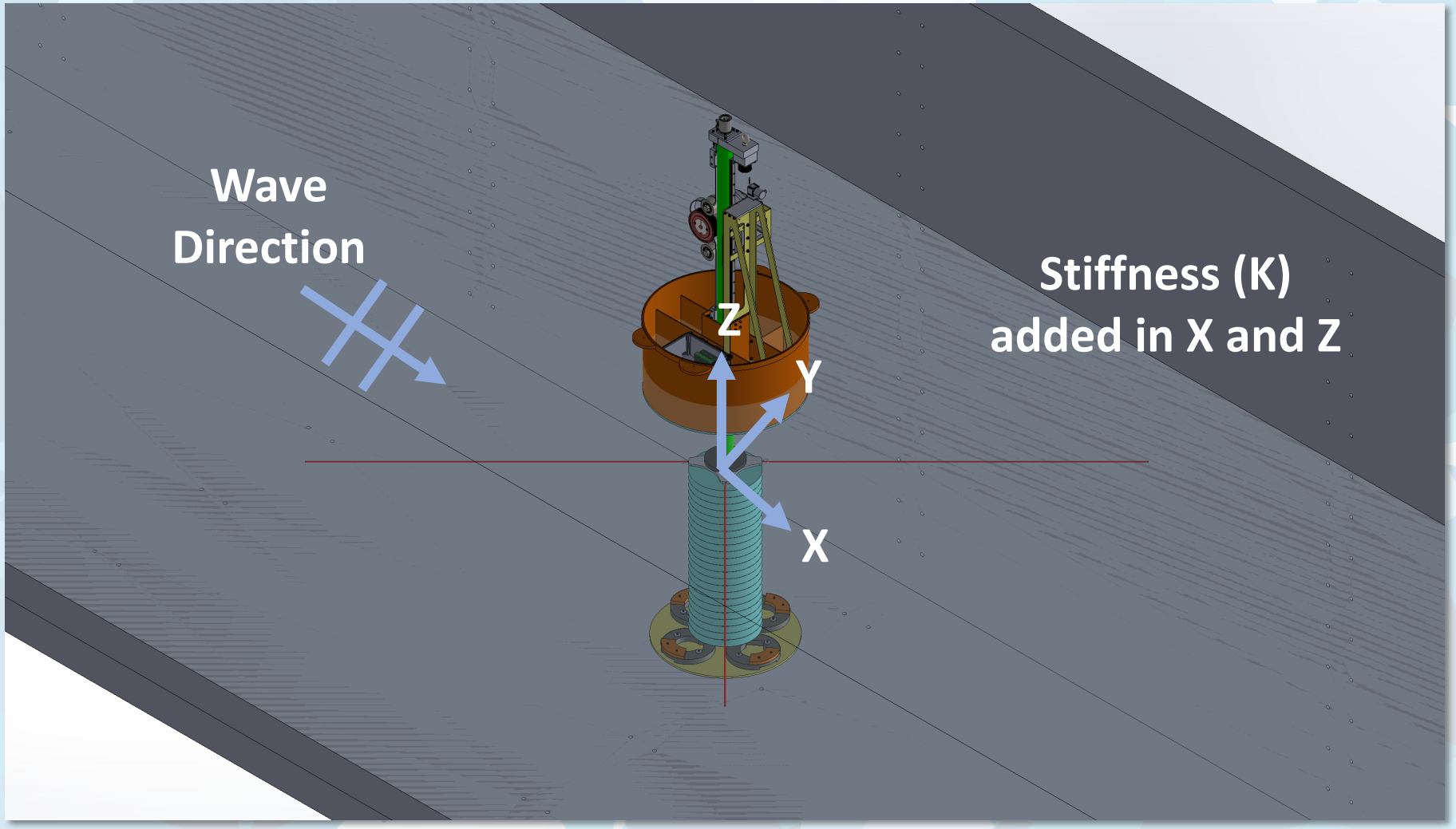

Six Degrees of Freedom Numerical Results

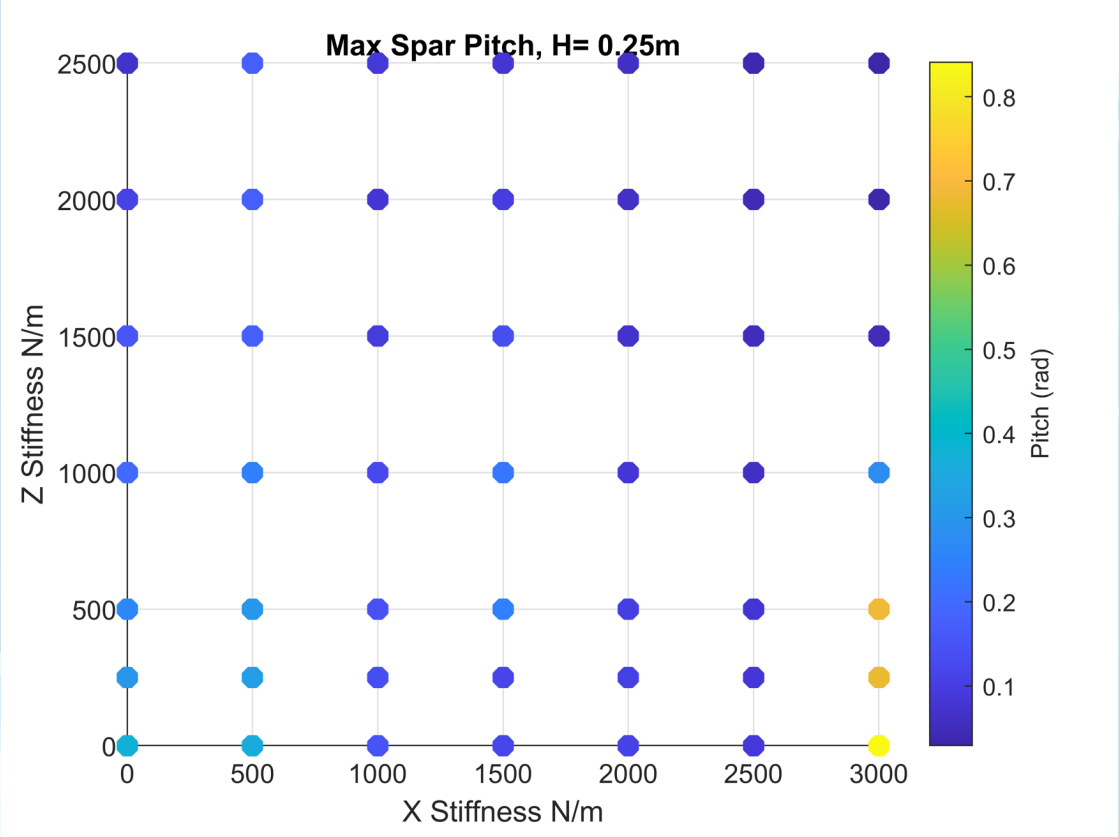

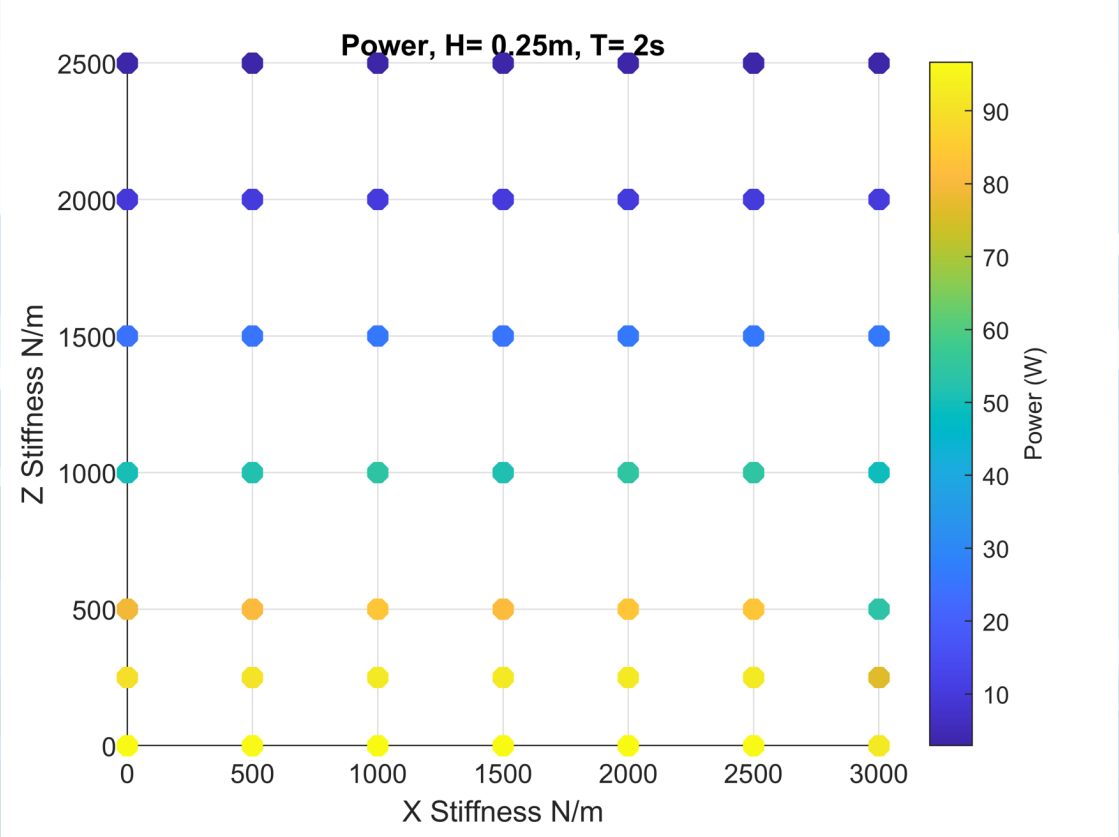

Minimize pitch

Maximize power

- System ID wet (Hydrodynamics)
- Modes of operation
  - Regular waves
  - Irregular waves
  - Control response
  - Non-linear waves

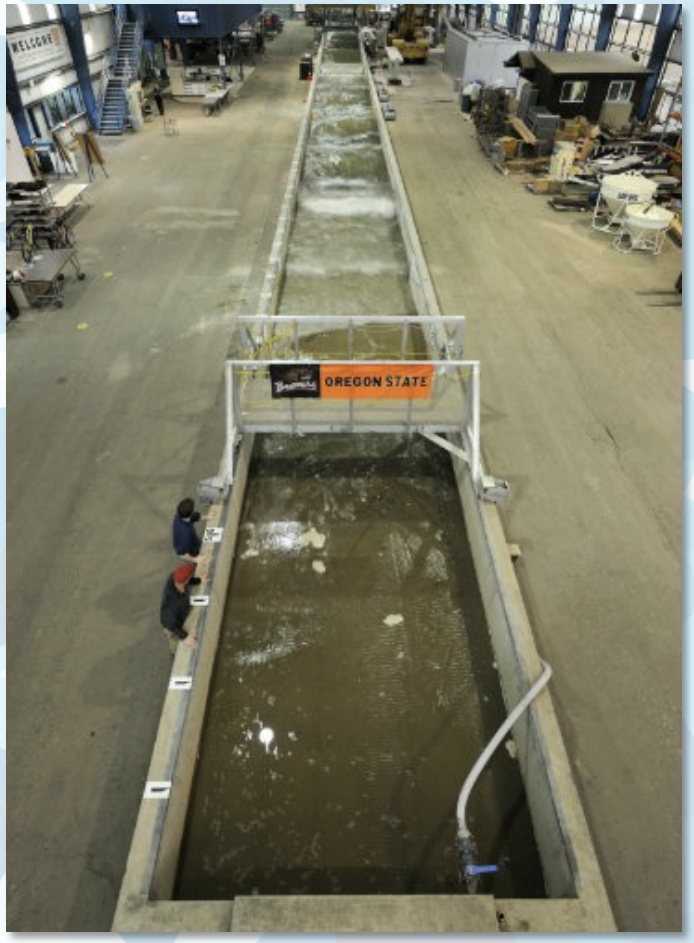

O. H. Hinsdale Wave Research Laboratory

Takeaways

- Open-Source
- Modular
- Lessons Learned

Future Work

- ‘Proving’ Optimized Hull and Heave Plate Shapes
- WEC Hydrodynamics for AUV Docking and Recharge
- WEC Power Dynamics in Remote Microgrids
- Non-Linear Wave Structure Interaction Models
- WEC Power Integration in OSU Campus Grid
- *Yours ?*

Questions?

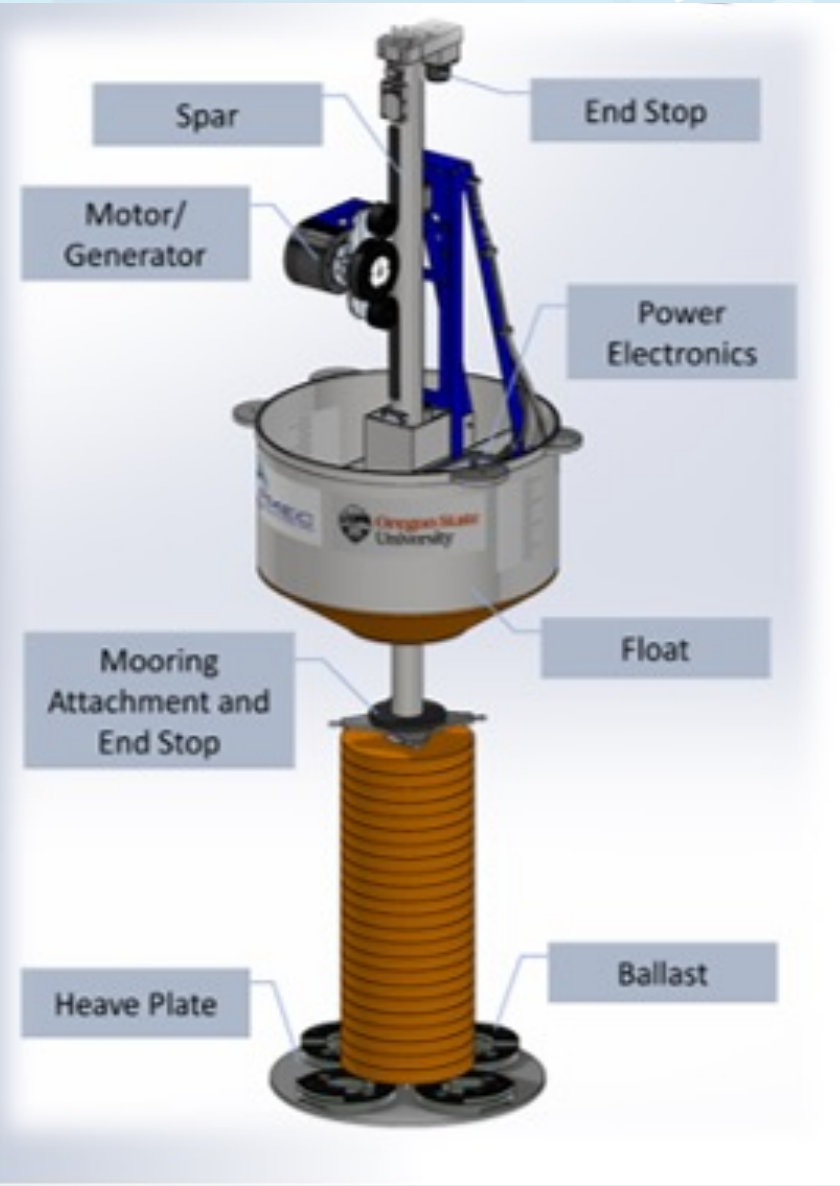
Spar
End Stop
Motor/
Generator
Power
Electronics
Float
Mooring
Attachment and
End Stop
Heave Plate
Ballast

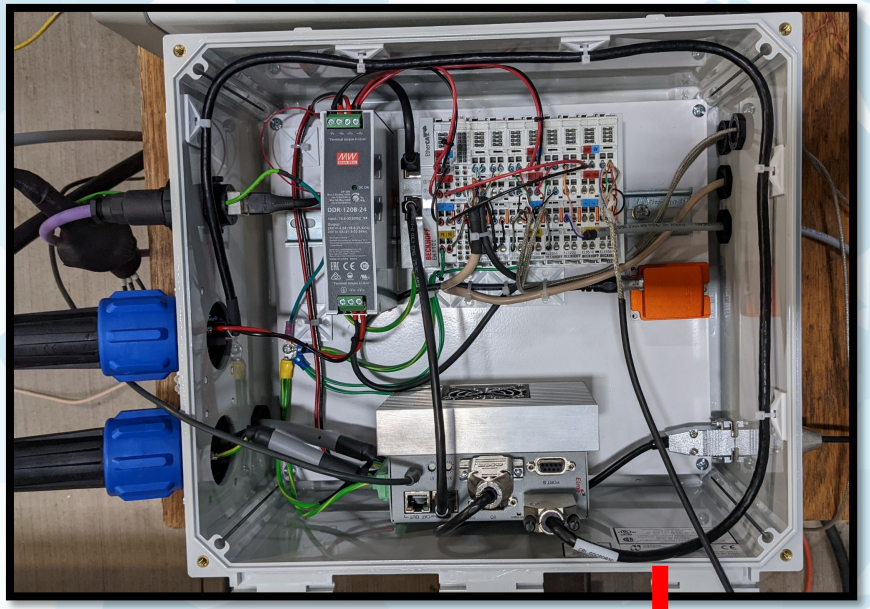

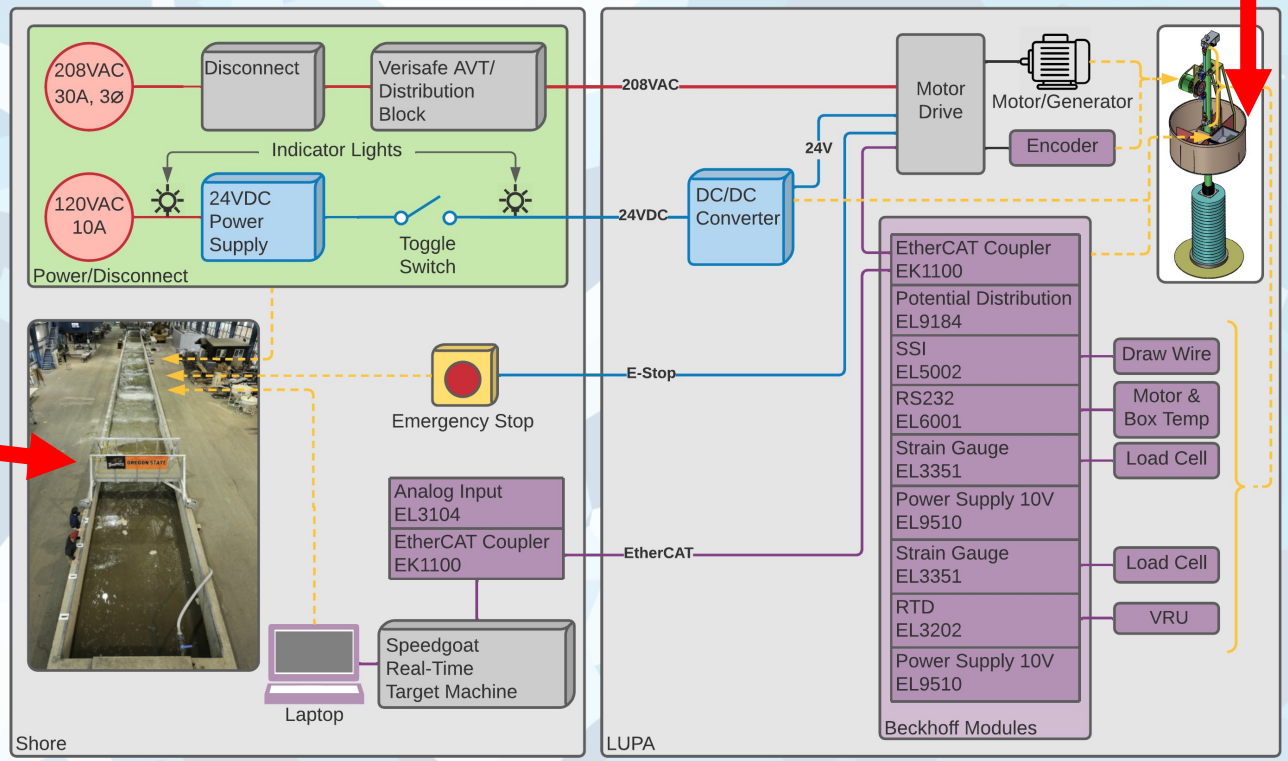
208VAC
30A, 3Ø
Disconnect
Verisafe AVT/
Distribution
Block
Indicator Lights
120VAC
10A
24VDC
Power
Supply
Toggle
Switch
Power/Disconnect
Emergency Stop
Analog Input
EL3104
EtherCAT Coupler
EK1100
Speedgoat
Real-Time
Target Machine
Laptop
Shore
208VAC
24V
24VDC
E-Stop
EtherCAT
Motor
Drive
Motor/Generator
Encoder
DC/DC
Converter
EtherCAT Coupler
EK1100
Potential Distribution
EL9184
SSI
EL5002
RS232
EL6001
Strain Gauge
EL3351
Power Supply 10V
EL9510
Strain Gauge
EL3351
RTD
EL3202
Power Supply 10V
EL9510
Draw Wire
Motor &
Box Temp
Load Cell
Load Cell
VRU
Beckhoff Modules
LUPA

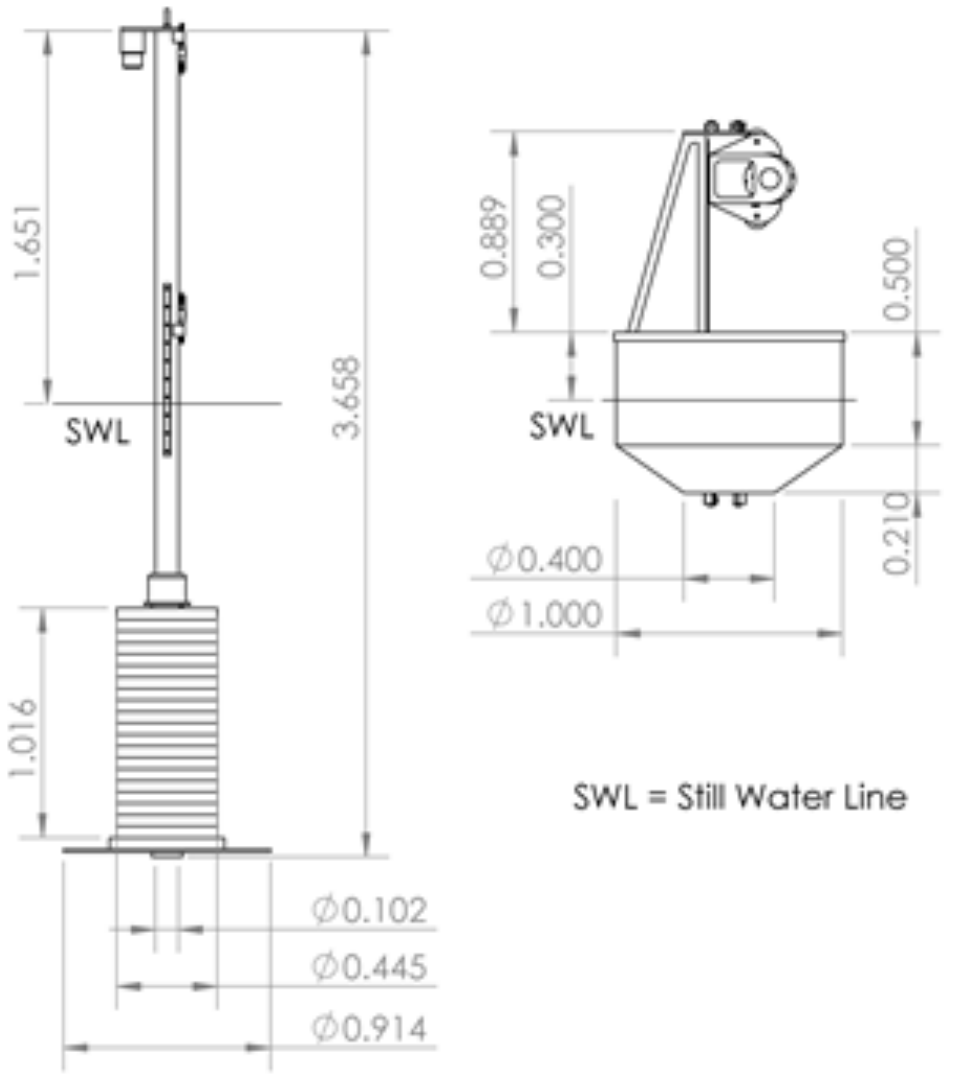

TABLE II
WAVE TESTING CONDITIONS FOR THE LUPA PROJECT

λ	SITE	METRIC	H_{m0}	T_p
1	PacWave South	max 90th percentile	5.20	15.50
1	PacWave South	max % annual energy	3.25	11.76
1	PacWave South	max occurrence	1.75	9.52
1	PacWave South	min 10th percentile	1.00	7.39
25	LWF (South)	max 90th percentile	0.21	3.09
25	LWF (South)	max % annual energy	0.13	2.35
25	LWF (South)	max occurrence	0.07	1.90
25	LWF (South)	min 10th percentile	0.04	1.48
1	PacWave North	max 90th percentile	4.90	15.46
1	PacWave North	max % annual energy	3.25	11.76
1	PacWave North	max occurrence	1.75	9.52
1	PacWave North	min 10th percentile	1.00	7.39
20	LWF (North)	max 90th percentile	0.25	3.46
20	LWF (North)	max % annual energy	0.16	2.63
20	LWF (North)	max occurrence	0.09	2.13
20	LWF (North)	min 10th percentile	0.05	1.68

Significant wave height and peak periods for PacWave sites and scaled to LWF. These points have been identified as conditions of interest for testing the device at scale. λ is scale factor.