Open Water Data Acquisition on a Vertical-Axis Tidal Turbine

Aidan Bharath
UMERC/METS Conference
September 14, 2022

Photo by Dennis Schroeder, NREL 46840

1 Vertical Axis Turbine on the Living Bridge

2 Challenges and Build Concept

3 DAQ-MAST Design

4 Pre-Deployment Verifications

5 Next Steps

Vertical Axis Turbine on the Living Bridge

Living Bridge Test Platform

- Located on Memorial Bridge on the Piscataqua River Estuary in New Hampshire.
- Platform offers:
  - Bridge Power Grid Connection
  - Adaptable deployment platform for various types of turbines
  - A Scalable data acquisition platform which can be adapted or built for any type of testing

Patrick O'Bryne, Mason Bichanich, Michael Monahan, Martin Wosnik, University of New Hampshire

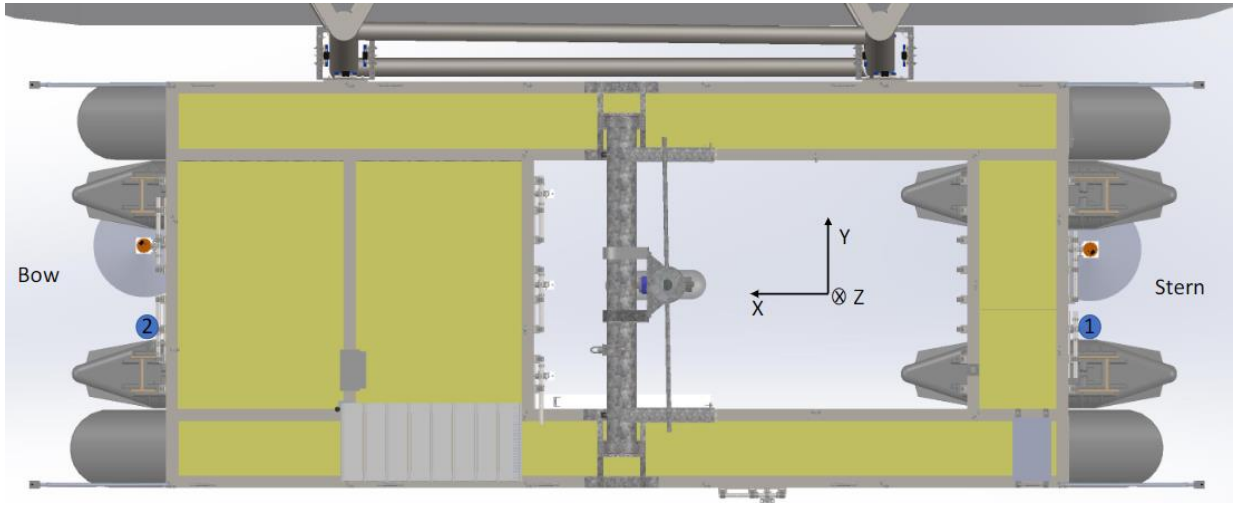

New Energy Vertical-Axis Turbine

- Has been in operation for 4 years.
- Have made measurements correlating inflow to turbine thrust and power measurements
- With the current working window we have the opportunity to add blade measurements to that list.

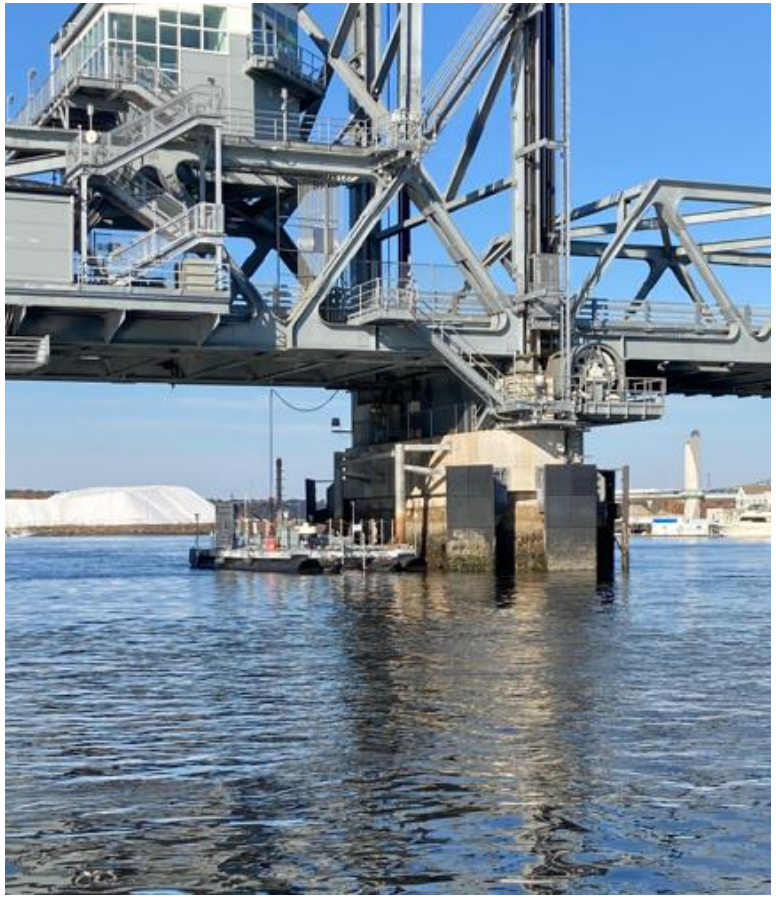

Casey Nichols, Patrick O'Bryne, Martin Wosnik, University of New Hampshire

Challenges and Build Concept

Challenge of Correlating Blade Strain

- This is a marine environment
- Measurements must be collected from a submerged rotating frame to the platform
- Sensors and equipment must have a minimal impact on the performance of the turbine

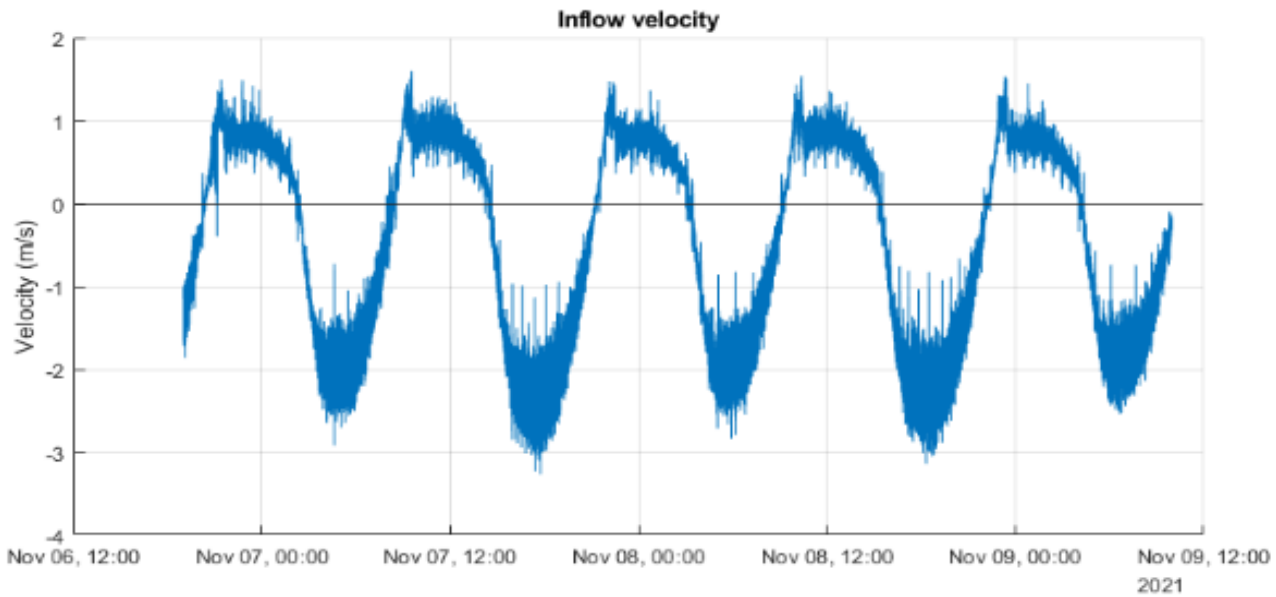

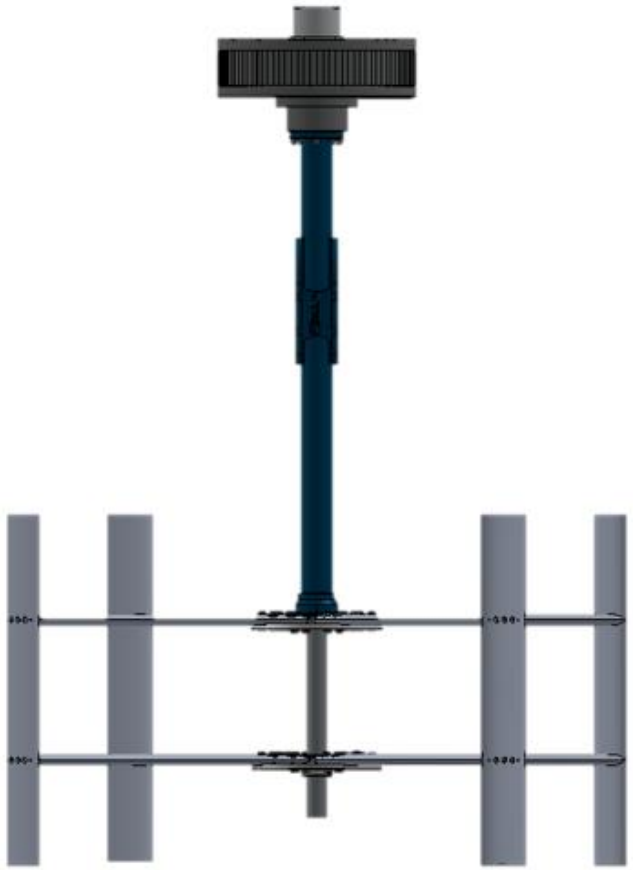

Patrick O'Bryne, Mason Bichanich, Michael Monahan, Martin Wosnik, University of New Hampshire

	Stern ADV	Bow ADV
Flood Max Current (m/s)	1.60	1.59
Ebb Max Current (m/s)	-2.70	-3.27

Solution Concept

- Make use of wireless comms to for continuous data-streaming above the water line.
- Construct a “DAQ-Mast” which will rotate with the turbine using low friction, custom bearings
- Machine a blade for sensors and wiring and maintain the blade profile.
- Modular construction for on water installation and servicability

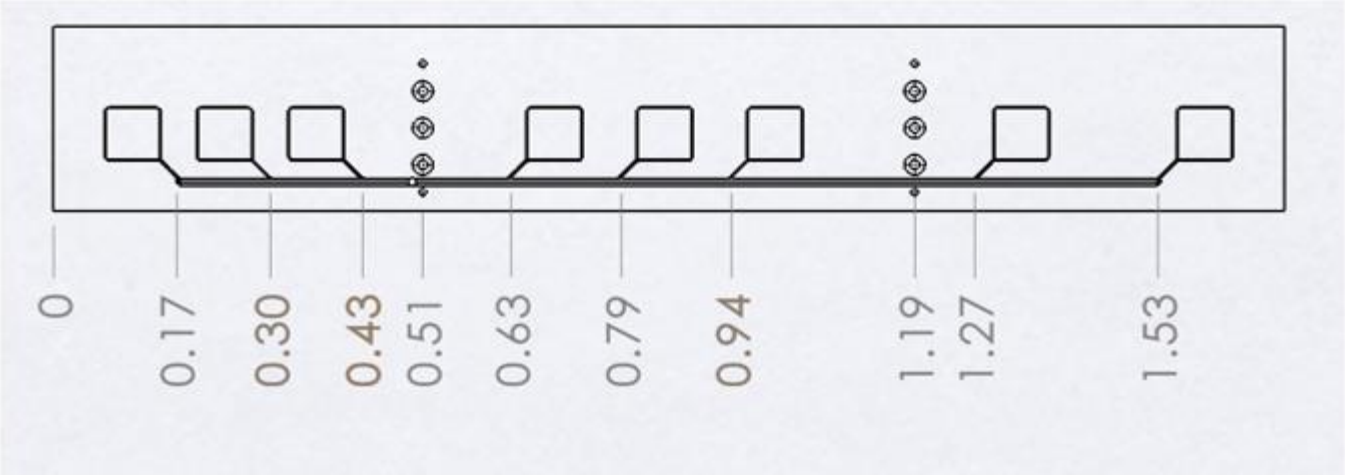

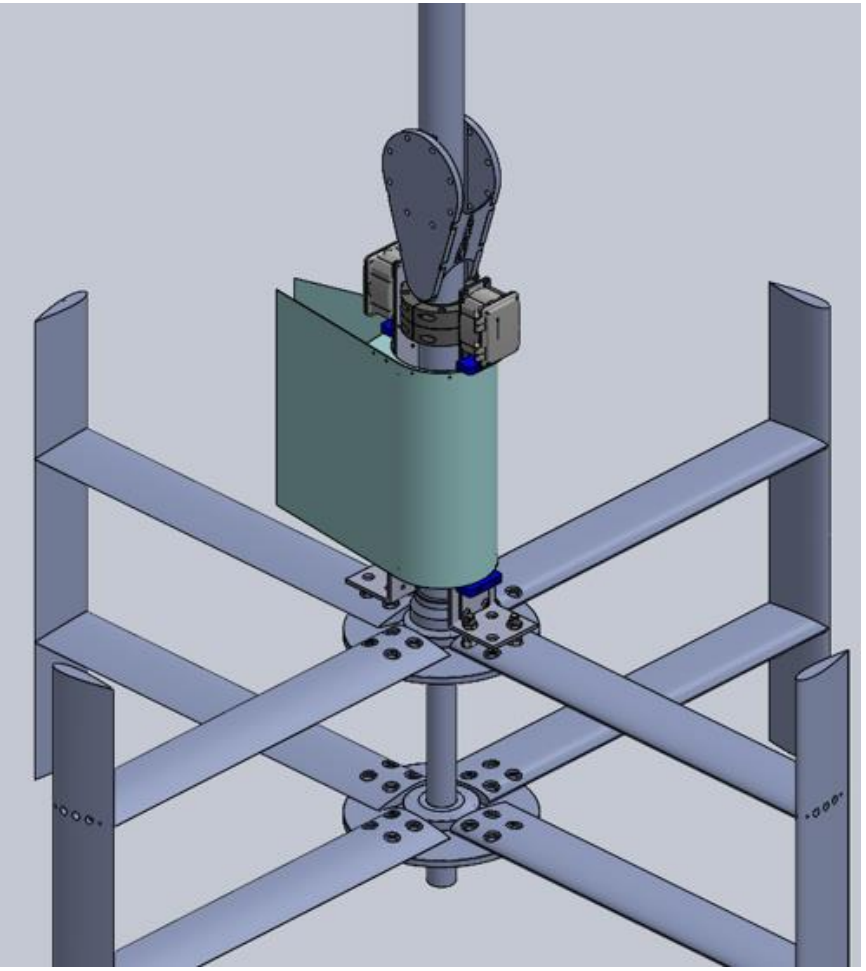

Casey Nichols, Hannah Ross, Ryan Beach NREL

DAQ-MAST Design

DAQ-MAST Design

- Connects to the rotating components of the turbine
- Delrin bearings are used to brace the mast against the force of the flow
- Marine rated enclosures house the strain and orientation sensing systems and the wireless transmitters
- All components are battery powered

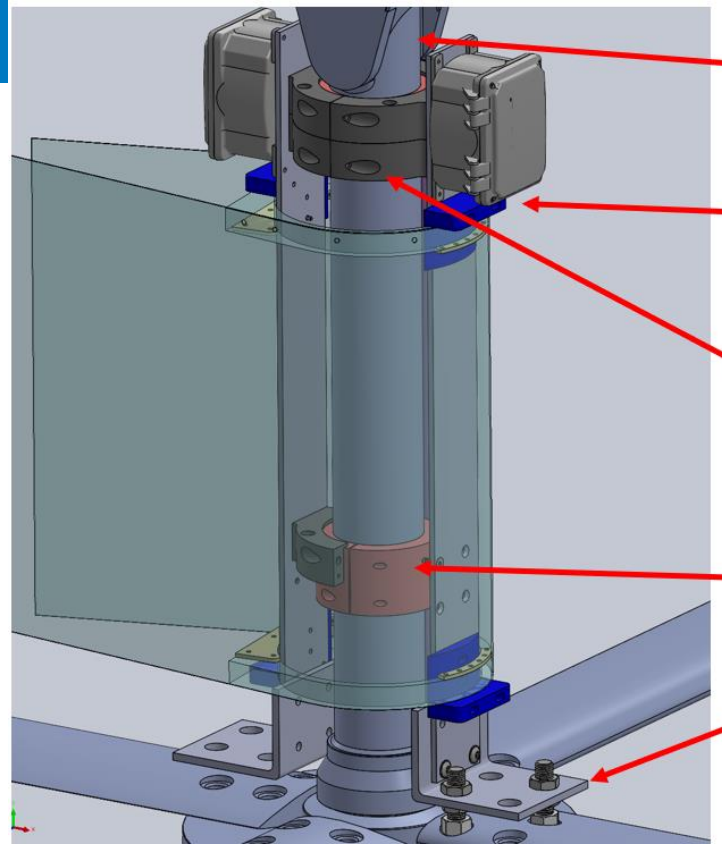

Casey Nichols, Hannah Ross, Ryan Beach NREL

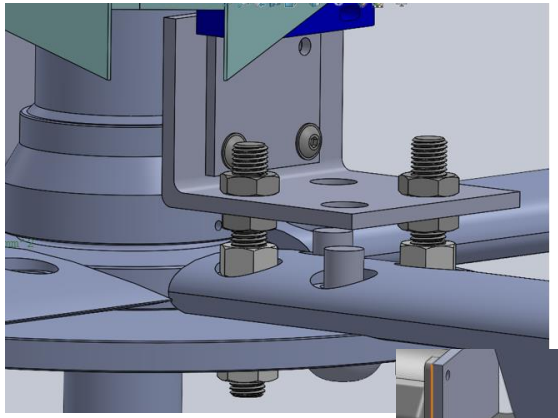

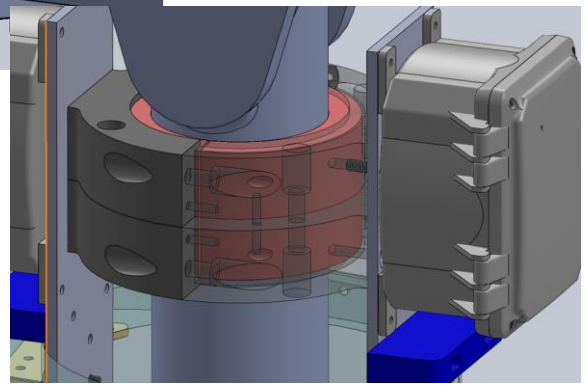

Bearing Design

- Delrin was selected for it's low friction and high strength characteristics
- Given the sizing requirements and the estimated fluid loading, the bearings were sized appropriately for continuous operation without lubricants
- Resistive torque from these bearings is >5% of the torque produced by the turbine.

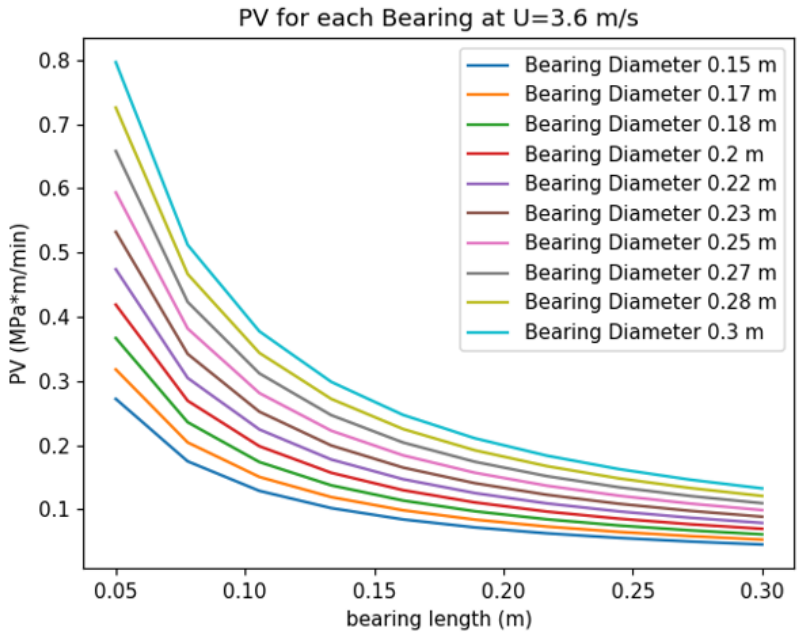

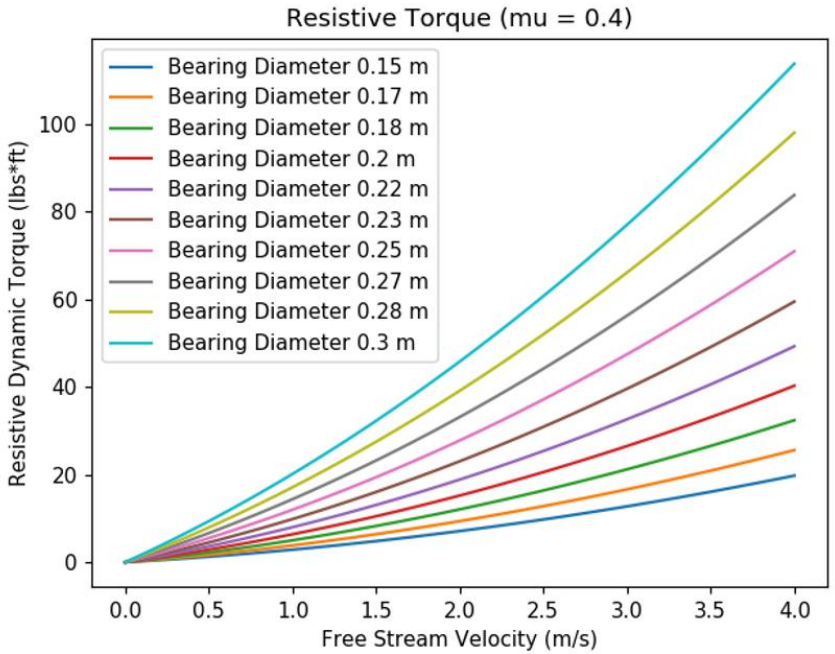

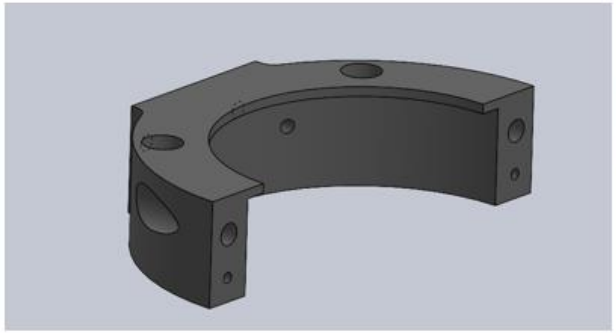

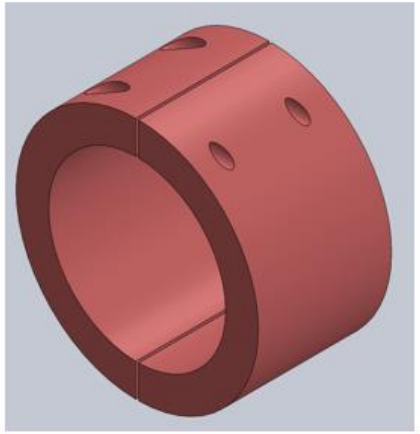

Casey Nichols, Hannah Ross, Ryan Beach NREL

Blade Modifications

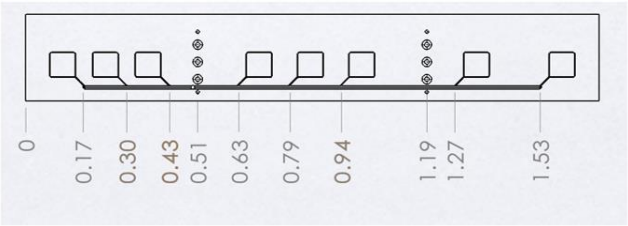

- The modifications to the blade were extensive
- The system comprises 8 full bridge strain gauges monitoring the flapwise bending moments
- Design reviews estimate to points of increased stress in the blade
- Operational load estimates were used to confirm that there is minimal risk of a catastrophic failure

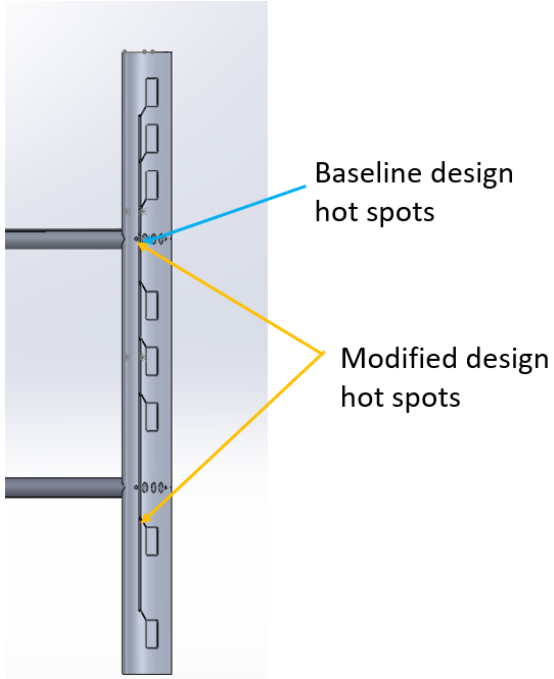

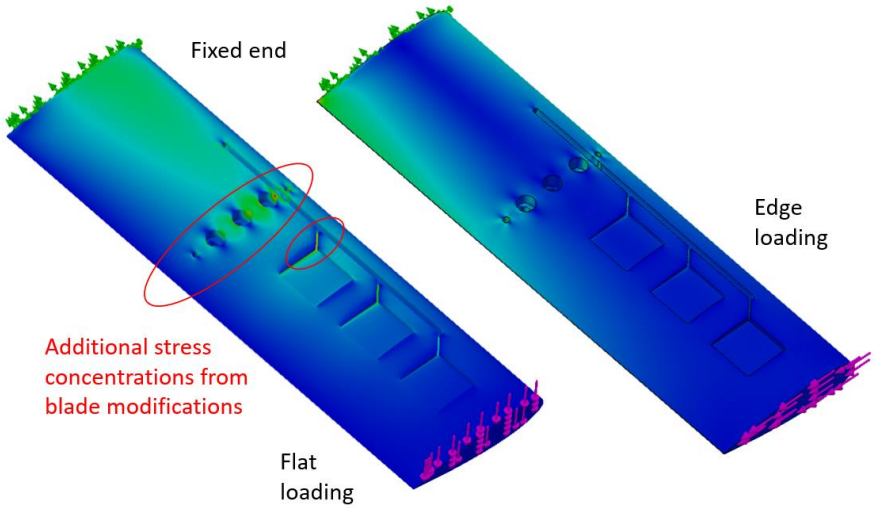

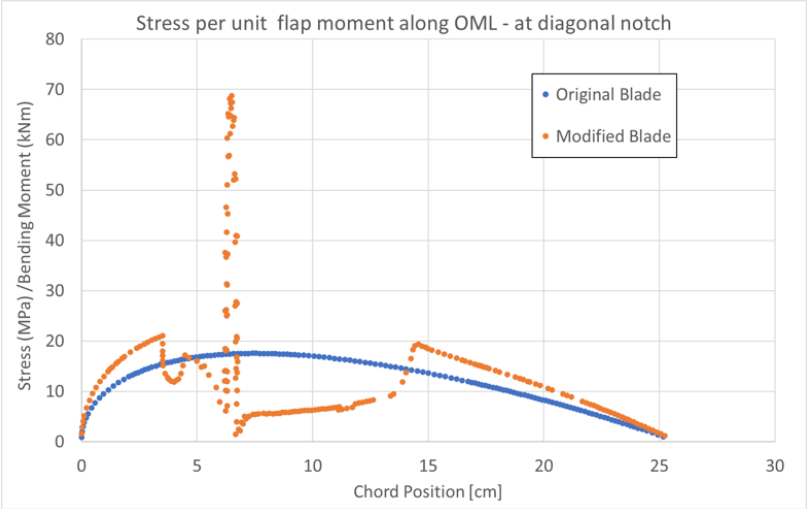

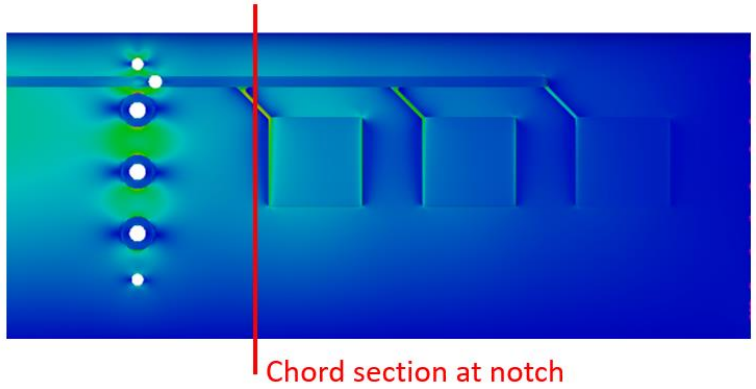

Casey Nichols, Hannah Ross, Ryan Beach NREL

MODAQ design

- **Acquire:** MODAQ can be equipped with a variety of sensors and instruments to meet measurement objectives. Software modules exist or can be easily developed for strain, loads, temperatures, voltage, electrical current, accelerations, rotations, GPS, rotational speed and position, analog and digital signals, and a variety of atmospheric and oceanic instruments.
- **Analyze:** MODAQ can process data and develop derived parameters on the fly or upload raw data to MODAQ:cloud for more detailed and complex analyses.
- **Monitor:** Summaries of the measurement data can viewed in near real time as plots and tables on the MODAQ:web deployment dashboard.
- **Control:** Basic control rules can be integrated into MODAQ to respond and react to changing conditions or threshold violations.

MODAQ Suite

Modular Ocean Data AcQuistion System: a field to product data system

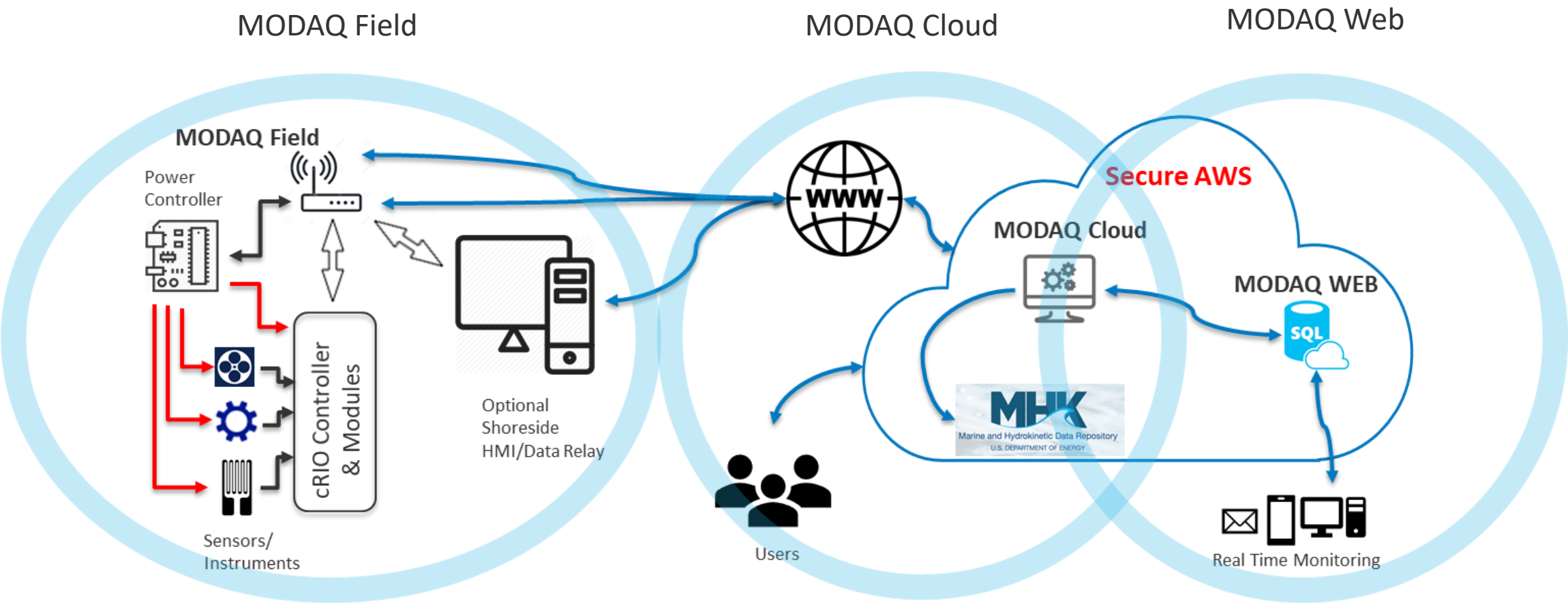

Build and Pre-Deployment Verifications

Blade Reconstruction and Instrument Test Stands

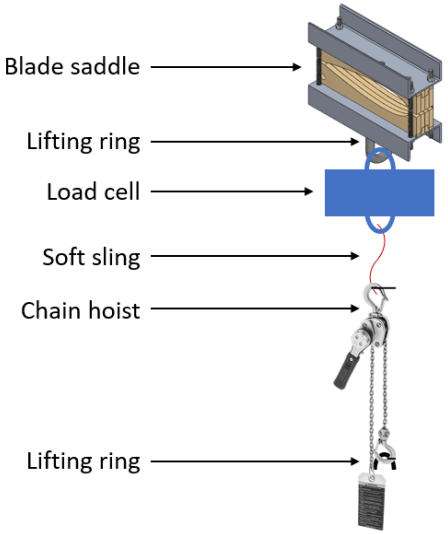

- Sensing system was designed, installed on the blades and verified through calibration at NREL Flatirons campus
- Lord sensors systems, largely used in wind turbine applications was adapted and tested in this project
- New strain gauge application techniques we used along with marine epoxies to protect the sensors and maintain the blade profile

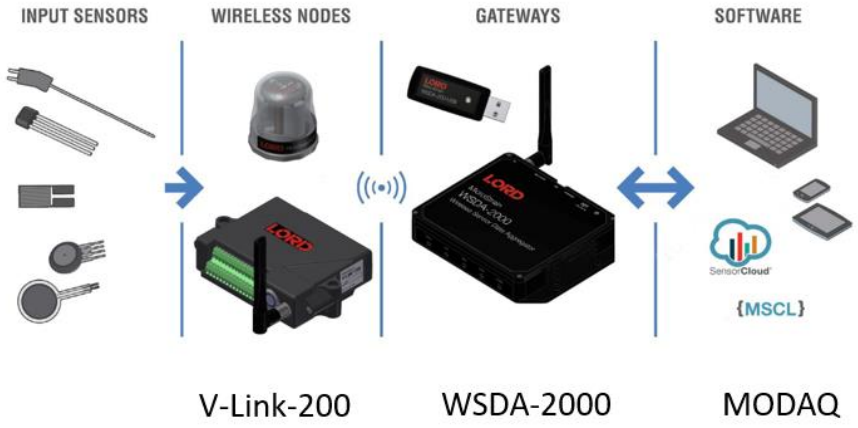

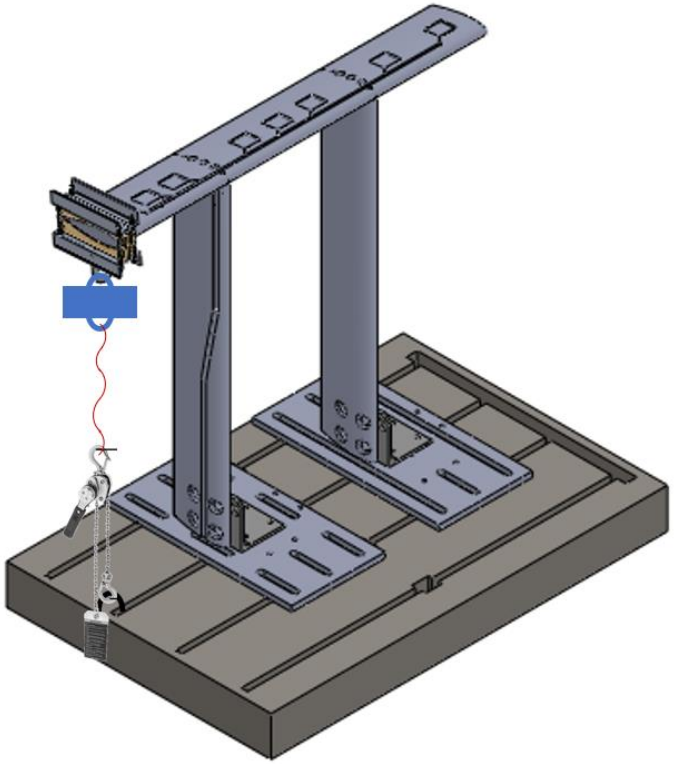

Next Steps

Deploy the Assemble and Begin Data Collection

- The turbine blades, struts and sensing systems a currently on route to New Hampshire.
- The Teams from NREL and UNH will be working on-site through the rest of the season to reconstruct and verify the operational readiness of the system.
- Experimental testing period is expected to run over several full tidal cycles
- The resulting datasets will be made publicly available on the MHKDR.

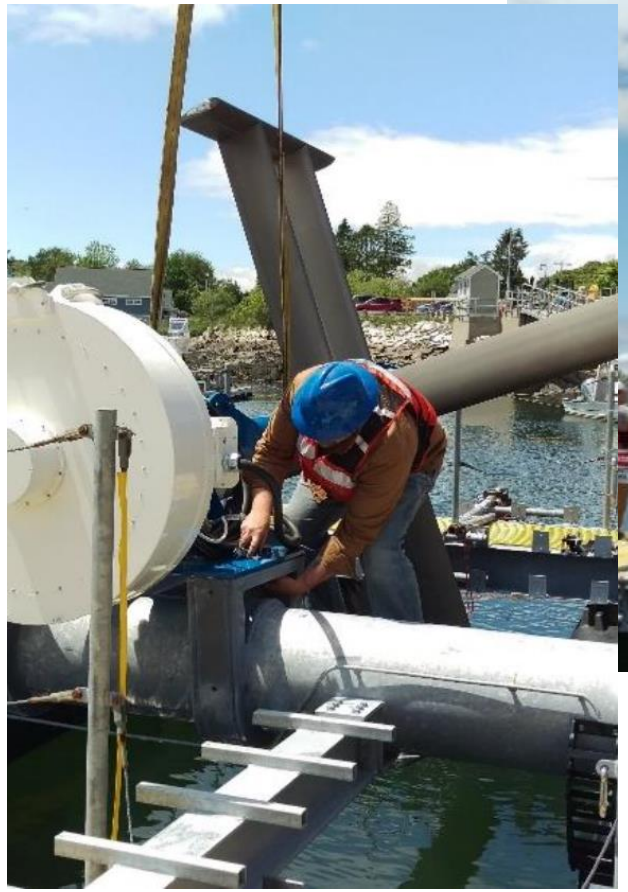

Patrick O'Bryne, Mason Bichanich, Michael Monahan, Martin Wosnik, University of New Hampshire

www.nrel.gov

NREL
Transforming ENERGY

Photo from iStock-627281636