energies

MDPI

Review

Fault Diagnosis and Condition Monitoring in Wave Energy Converters: A Review

Seyed Abolfazl Mortazavizadeh, Reza Yazdanpanah, David Campos Gaona * and Olimpo Anaya-Lara

Wind Energy and Control Centre, University of Strathclyde, Glasgow G1 1XW, UK; seyed.mortazavizadeh@strath.ac.uk (S.A.M.); reza.yazdanpanah@strath.ac.uk (R.Y.); olimpo.anaya-lara@strath.ac.uk (O.A.-L.)
* Correspondence: d.campos-gaona@strath.ac.uk

Abstract: The technology used in wave energy conversion systems is still in the early stages of research and development. There are a number of challenges associated with becoming a commercially viable source of renewable energy due to the high operating and maintenance (O&M) costs. A potential solution for increasing the availability of wave energy converters (WECs) and reducing operating and maintenance costs might involve the implementation of condition monitoring and fault-tolerant control systems, because in some reported WEC systems, 57% of total operational expenses go to maintenance activities. The use of condition monitoring techniques in wind energy systems has, for instance, shown the ability to detect failures months in advance, resulting in savings of 15–20% during the operational phase. This paper reviews the methods proposed (and some used) by researchers to monitor WEC's condition and diagnose faults. Fault-tolerant control methods developed to improve the reliability of WECs and hence their commercial viability are also reviewed and discussed. In addition, a future research plan is provided here.

Keywords: condition monitoring; fault detection; wave energy converter; review

check for updates

Citation: Mortazavizadeh, S.A.; Yazdanpanah, R.; Gaona, D.C.; Anaya-Lara, O. Fault Diagnosis and Condition Monitoring in Wave Energy Converters: A Review. *Energies* **2023**, *16*, 6777. https://doi.org/10.3390/en16196777

Academic Editor: Mário José Gonçalves Cavaco Mendes

Received: 7 August 2023
Revised: 13 September 2023
Accepted: 21 September 2023
Published: 23 September 2023

1. Introduction

Compared to other renewable energy sources, ocean waves have many significant advantages, such as high availability, high load factors, low environmental impact, higher energy density, and predictability [1,2]. Ocean energy is one of the renewable energy resources that has the potential to provide a substantial amount of energy around the world [3]. Wave energy potential is highest in Portugal, France, and the UK, among other European countries [4].

It is estimated that ocean waves have a potential capacity of 26,000 TWh per year [5]. By 2050, OES estimated a global potential to deploy 748 GW of ocean energy, saving up to 5.2 billion tons of carbon dioxide [6]. It is estimated that there are 381 GW and 286 GW of wave energy resources in Europe, respectively [7]. Wave and tidal capacity, as the two most developed ocean energy technologies, combined in the EU is expected to reach 100 GW by 2050 [5]. Combined wave and tidal stream energy could provide around 20% of the UK's current electricity needs, equivalent to around 30–50 GW of installed capacity [8].

There were more than 200 wave energy converters (WECs) under the development stage in the world in 2017 [9].

Despite the first patent registered in 1799 and the first wave energy devices being designed in 1898, there are very few commercial wave energy projects in operation and require more attention [10,11]. Wave energy systems have a much higher levelized cost of energy (LCOE) than any other energy source [12] due to the fact that WECs are placed in locations with harsh environmental conditions, and they might not be accessible for up to several weeks studied as weather windows [13,14]. Other factors may also affect the downtime of a WEC and LCOE, such as distance offshore, special permissions, and availability of equipment like boats [15]. NEREIDA's first year in Mutriku resulted in

200 kWh of production instead of 600 kWh due to a severe storm and the long closure of the facilities to fix it [16].

A wave energy converter's cost of energy (COE) depends on its capital costs, performance (amount of electricity produced), and operation and maintenance (O&M) [17]. In a specific WEC, planned and unplanned maintenance activities are responsible for up to 29% and 28%, respectively, which amounts to 57% of total operational expenses (OPEX) [18].

O&M cost evaluation and modeling have been extensively studied for wind energy systems, but wave energy has rarely been studied [19]. Using a statistical model, Abdulla et al. assessed the availability of Aquamarine Power's second-generation Oyster device, an 800 kW flap-type WEC [20]. As described by Gray et al., the Monte Carlo-based functionality of the model is similar to an O&M tool developed by Pelamis Wave Power [21]. Using an O&M tool, Ambühl et al. explored a number of different O&M strategies for the WaveStar device [17]. It differs from other studies in that it simulates fatigue of two components within the device using a damage model, rather than assuming constant failure rates.

By predicting the state of health of individual WECs in a WEC farm from sensor data, a required level of reliability can be achieved without over-designing components, reducing production, maintenance, and operation costs [22]. Using condition monitoring techniques in wind power, for instance, has been found to save 15–20% during operation and to detect failures months in advance [22].

At nine different locations, a specific study of an overtopping WEC found payback periods of 10 to 50 months at different locations with wave energy resources ranging from 42 to 62 kW/m [23,24].

In general, only 60% and 50% of raw wind and wave resources can be usefully converted. Basic aerodynamics (wind) and hydrodynamics (waves) account for these limitations [25,26].

Methodology and Structure of the Review

There is a growing field of research into fault detection and condition monitoring in WECs which is not sufficiently focused. Numerous studies have been conducted on the control of WECs in order to increase their efficiency and decrease their costs. However, an effective maintenance-based monitoring and supervision system can reduce the maintenance costs and the overall costs of the system. Thus, this paper presents a comprehensive review on fault detection methods and condition monitoring techniques presented in the references. As wave energy systems share many similarities with other kinds of energy, particularly wind energy, other alternatives have also been suggested to inform researchers about the open fields for research.

Searches were conducted in major databases, such as Scopus, Google Scholar, and IEEE Explore. Key sources include *IET Renewable Power Generation*, *IET Electric Power Applications*, *Journal of Renewable and Sustainable Energy*, *Renewable Energy*, *Wind Energy Science*, *Energies*, *IFAC-PapersOnLine*, *Journal of Marine and Engineering*, and *IEEE Transactions* (for example, *Control Systems Technology*, *Power Systems*, *Energy Conversion*, *Instrumentation and Measurement Magazine*, *Sustainable Energy*, and *Oceans*). Wave energy reports from research institutions, e.g., National Renewable Energy Laboratory (NREL), Ocean Energy Systems and Entec, and large European projects, e.g., Holistic Advanced Prototyping and Interfacing for Wave Energy Control (HAPIWEC) and Supergen, were also carefully reviewed.

Therefore, the current paper is organized as follows: Section 2 presents the WECs' operation and technology briefly. Section 3 reviews fault diagnosis methods for WECs. A discussion of fault detection, isolation and reconstruction (FDIR) methods for WECs is provided in Section 4. In Section 5, we discuss the importance and methods of condition monitoring in WECs. Section 6 presents fault-tolerant control methods for WECs. There is a discussion of the direction of future research in Section 7 while Section 8 provides the conclusion.

2. WECs Operation and Technology

Other potential ocean energy sources, in addition to WECs, include tidal energy, which is determined by the rise and fall of the sea level as a result of the gravitational attraction of the moon, ocean and river currents that are affected by wind, water temperature, salinity, or density, salinity gradient, which is determined by the difference in salinity between seawater and land, and ocean thermal, which is determined by the temperature difference between near-tropical surface seawater and land [27–32].

Wave energy has several advantages over other marine energy resources, including its high energy flow density, which is 10 to 40 times greater than wind energy. In addition, the wave energy utilization device has the advantages of being simple to construct, convenient to maintain, and convenient for mass and intensive development [33]. Wind energy is unidirectional, but wave energy is bidirectional. Waves are described by both amplitude and period, whereas wind has just one primary variable, wind speed [10,25]. Over a long period of time, ocean waves have lower power fluctuations, making them more stable sources of renewable energy [4].

WECs can be classified as shown in Figure 1. The main forms of wave energy converters include pitch type, heave type, oscillating water column type, and so on [33]. Over 1000 wave energy conversion techniques have been patented in Japan, North America, and Europe [34,35]. Despite their wide variety in design, WECs are generally classified by their location (shoreline, nearshore, and offshore) [32,36–40] as well as their type (attenuator, point absorber, and terminator), as shown in Figure 2 [41–43]. In terms of working principle, there are three types of devices: oscillating water columns, wave-activated bodies, and overtopping devices [44–47].

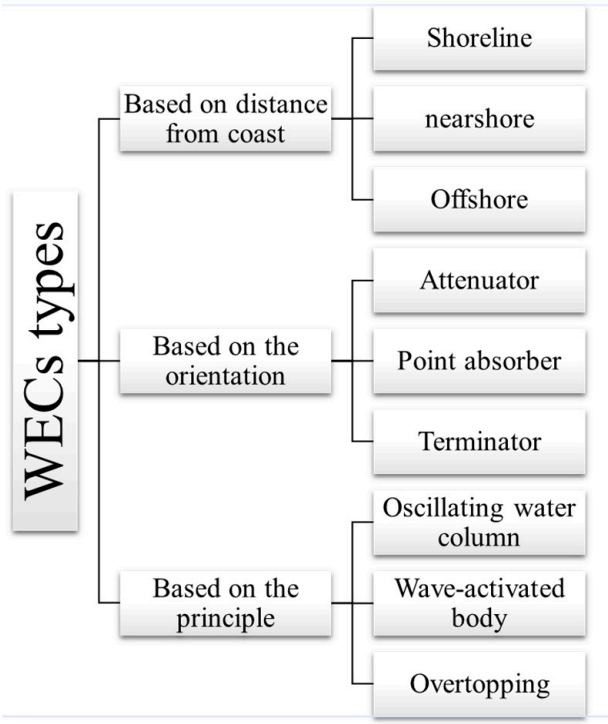

Figure 1. WECs classification [32,37–47].

Although marine energy converters come in a wide variety, they can be designed using IEC TS 62600-2:2019. Providing an appropriate level of protection against all hazards that could cause catastrophic failure in the structural, mechanical, electrical, or control systems of the energy converter is its purpose [48,49].

To convert slow oscillating motion and high power (from waves) into rapid rotation in one direction (required by an electric motor), the WEC power take-off (PTO) system is needed [50,51]. As reported in [7], direct drive and air PTOs have the highest and

lowest efficiency, respectively, among different types of PTOs, including hydraulic, water, mechanical, and air.

Despite a lot of attention being paid to energy-maximizing point absorber WECs, fault-tolerant control methods are more important because WECs are complex and expensive infrastructures with high safety concerns. Due to the high installation and maintenance costs of WECs as well as their difficulty of access, fault-tolerant controls (FTCs) and FDIR units are necessary to maintain a robust performance [52].

Using intelligent control approaches, such as second-order sliding mode control [12], the stochastic nature problem of wave energy can be reduced, as well as the power fluctuations of WEC arrays, which will lower the overall maintenance cost.

Ringwood et al. presented a comprehensive analysis of the sensitivity and robustness of WECs with a linear model by comparing different control methods [10]. Particularly under highly energetic conditions, these simplifications will lead to modeling errors and cause a degradation in the control performance [53]. Hence, in order to reduce sensitivity to modeling errors and nonlinear effects, a hierarchical robust controller is introduced that is capable of energy-maximization recovery via a passivity-based control means [54]. Using generator-side power electronic converters instead of mechanical resonance regulation is a fast-optimal control strategy for both stiffness and damping forces [55].

Due to wear and corrosion caused by seawater on the converter device and short circuits between the external modules, a variety of faults can occur in the WEC system, with actuators being the most common [56,57]. The most common faults of WECs are actuator failure and sensor failure as reported in [58–60].

The failure rate, the inspection quality for overall costs, and the number of repairs needed during the lifetime of a WEC are reported in [17]. For example, the Wavestar device had a lifetime of 20 years and generated electricity for three and a half years between January 2010 and September 2013 [17].

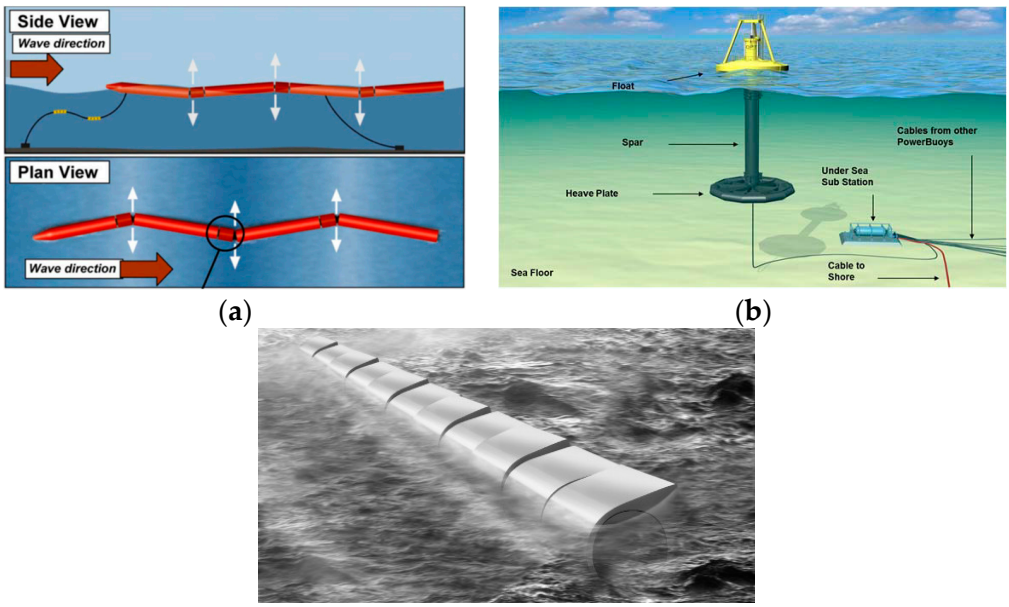

(**a**) (**b**) (**c**)

Figure 2. Different types of WECs: (**a**) attenuator type WEC: Pelamis wave farm [61]; (**b**) point absorber type WEC: OPT Powerbuoy [62]; and (**c**) terminator type WEC: Salter's Duck idea [63].

Fault detection methods can be classified into two main approaches: model-based and signal-based techniques [64].

Due to the wave energy industry's lower overall technology readiness level (TRL), the absence of a consensus on WEC technology, and the lack of reliability models for core WEC components, the realization of WEC condition monitoring systems is still in its

infancy [22,65,66]. Engineering and Physical Sciences Research Council (EPSRC) funded a project called HAPIWEC to provide researchers with a remote accessible WEC to develop and test their control algorithms. To implement their control method, collect data, and develop their own controller, researchers can access the University of Edinburgh test bench through the internet and Online MATLAB, as shown in Figure 3 [67,68].

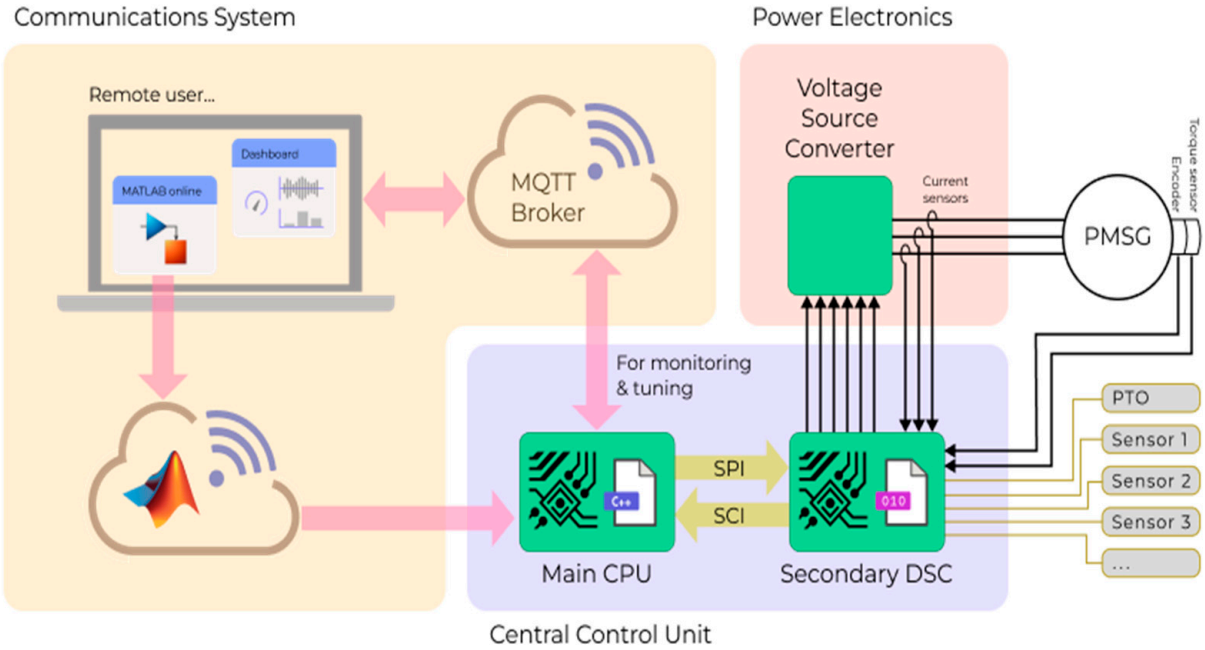

Figure 3. The overall layout of the HAPiWEC project [69].

3. Fault Diagnosis Methods for WECs

During harsh conditions such as hurricanes, WECs should be resilient to loads 100 times greater than average [34]. Hence, it is necessary for WECs to have a condition monitoring and fault diagnosis unit in order to ensure their reliability.

In land-based structures as well as wind turbines, acoustic emission monitoring is already used to monitor structural health. As a result of this method, faults and defects can be detected early, allowing more time for maintenance and repair procedures to be planned in order to prevent catastrophic failures. In [70], the scope of acoustic emission monitoring is extended to WECs.

To investigate the dynamic behavior of the WEC when the PTO is seized during a normal wave condition, a fluid–structure interaction model was developed in [71]. As a result of the PTO seizer fault, the frequency content of dynamic loading acting on the WEC was modulated, although the amplitudes of the motion and tether forces of the WEC were not significantly larger. As a result of a seized PTO located on the tether, the cyclical loading frequency will increase by six to seven times. However, the amplitude of the cyclical loading is reduced.

In [72], an observer estimates faults occurring in displacement and velocity sensors and actuator faults occurring in PTOs. The proposed observer and controller parameters are determined offline, while a linear model for WEC is considered, so the control approach can be implemented on economic hardware efficiently.

An investigation of the impact of estimating the excitation force on a model-based fault detection algorithm is presented in [73]. This study presents smoothed estimates of excitation forces at the expense of time delay.

In the WEC fault detection method, signal-based methods are not widely used compared with model-based methods.

A temperature sensor in [74] measures the internal temperature of an induction generator, which limits its maximum overload in PTO. Temperature sensor outputs can also be used for fault detection and monitoring purposes.

In [75], vibration monitoring was used to detect the wear of a linear generator at the Lysekil research site on the Swedish West Coast. Generator cogging, fluctuations in the damping force, and variations in the Lorenz forces in the stator are distinct issues and vary over time.

To detect faults in generators used in WECs, active power monitoring and machine current signature analysis (MCSA) are also recommended [76]. These techniques are widely used for fault detection in electrical machines and can be adapted to be used in wave systems. By using current sensors that are normally used for the generator control, the measured stator current can be also monitored in the MCSA method for fault diagnosis purposes. Table 1 presents a summary of fault detection approaches already used for WECs.

Table 1. Fault detection methods in WECs.

Method	References	Pros or Cons	Comments
Acoustic emission monitoring	[67]	Early detection	Extensively used in similar systems like offshore wind turbines
Observer-based methods	[69]	Offline parameter determination, economic solution	Fault detection for both actuators and sensors
Excitation force estimation	[70]	Time delay	Model-based technique
Temperature sensor	[71]	Used for PTO load monitoring as well	
MCSA	[73]	Generator different faults detection	No more sensors would be added to system
Vibration monitoring	[72]	Various faults detections	Used for wear detection
Structural analysis	[74]	Mechanical faults detection	Lots of faults can be detected
Reactive power monitoring	[73]	Electrical component faults detection	
System functionality method	[75]	Simple and early fault detection	

4. FDIR Units for WECs

As an emerging market, ocean energy must overcome a number of challenges to prove its reliability and affordability [5].

Adding a fault detection, isolation and reconstruction (FDIR) unit to WECs is an effective method of improving their reliability without adding additional weight or cost.

Reference [72] presents a robust fault diagnosis approach for detecting WEC sensor and actuator faults in real time. The compensator minimizes the influence of faults and maintains the control performance. In order to optimize the energy output, a non-causal linear optimal control method is applied, in which the future excitation force determines the current control action.

Reference [77] proposes a model-based fault detection and isolation (FDI) method for Archimedes wave swing (AWS) type WECs to address mechanical issues, such as central tank perforation, brake damage, position sensor faults, and actuator faults. It is a method based on structural analysis that provides general conditions for fault detection and isolation in nonlinear systems described by lumped-parameter models. Damage to damping subsystems has the greatest impact on performance as reported.

For a doubly-fed induction generator (DFIG) used in WECs in [76], a sensorless speed control has been implemented. Electrical component faults such as rotor eccentricity and torque oscillations were detected using reactive power monitoring.

Failure modes and effects analysis (FMEA), fault tree analysis (FTA), event tree analysis (ETA), function failure design method (FFDM), and function failure identification and propagation (FFIP) framework are among the failure and safety analysis techniques

currently being used in system design [78]. Engineers can evaluate system dependencies and fault tolerance early in the design process using function-based failure analysis. It helps catch design problems while they are still relatively inexpensive to fix. For conceptual design stage analysis, [78] proposes a simple system functionality method, which places systems and subsystems in a flow (mass, energy, and signal) based on their location and assigns functionality numbers to describe their contribution. It is then possible to determine how a component or sub-system fault affects other components or the entire system.

5. Condition Monitoring for WECs

Due to the high cost of marine intervention in challenging waters and the limited availability of specific vessels, WECs have high operation and maintenance (O&M) costs. Harsh conditions at sea could cause damage or failure of devices. Furthermore, weather windows for accessing WECs for O&M activities do not always align with access needs. Consequently, it could lead to further damage and longer periods of downtime, further increasing O&M costs [70,79].

The failure of wave energy systems such as [80–82] highlights the need for a condition monitoring system that takes structural integrity and mechanical performance into account.

A condition monitoring system in a renewable energy device provides early detection of component failures, which results in the implementation of control functions, reduced number of shutdowns and increased availability [83]. Reference [22] presents a reference architecture for condition monitoring of a WEC and a prototype implementation.

Condition-based monitoring is beyond fault diagnosis and prognosis. Component typology and their failure modes must be identified and prioritized using methods such as FMEA. The development of a condition-based monitoring strategy includes not only diagnostic and prognostic results but also weather windows, schedule constraints and financial considerations [65].

Condition monitoring for wave energy systems can be performed at two levels: system level and component level [22]. At the system level, condition monitoring involves comparing the performance of the entire system with the expected performance. To detect failures on a component level, a mathematical or statistical model of the component (or subsystem) is used.

It is possible to perform maintenance after a failure (corrective maintenance) or before a breakdown occurs (preventive maintenance) [17]. A risk-based inspection and maintenance planning approach for WECs is presented in [17] which is a dynamic approach considering real weather data, damage accumulation, uncertainties related to costs, structural damage accumulation, inspection accuracy and different maintenance strategies. Different transport strategies have been considered to calculate total repair costs for O&M, including repair and lost electricity costs. An analysis of the effect of failure rate, inspection quality, and the number of repairs required over the life cycle of the Wavestar WEC is presented in [17].

Condition-based maintenance involves monitoring and inspecting system parts continuously to predict failures and determine the necessary maintenance. Operational safety is improved, failures are reduced, and maintenance costs are minimized by this method [84].

The typical condition monitoring techniques used for offshore wind farms can be applied to WECs as well. Vibration monitoring for gearbox and bearing health, noise and stress levels of rotating machinery, and oil monitoring for particulates, moisture, and temperature are typical parameters measured [83,85]. For example, according to [80], 45% of the gearbox faults in tidal turbines were identified by symptoms including oil debris, temperature, vibration, and torque.

An assessment can be performed on individual components or on the entire system for a range of operating conditions using the monitoring system. In addition, many industrial applications like offshore wind farms utilize supervisory control and data acquisition (SCADA) systems with multivariate real-time measurements that can be adapted for WECs [86–89].

In [90], 26 SCADA data analysis tools have been reviewed for wind turbines from wind turbine manufacturers, renewable energy consultants, industrial software companies, electrical component suppliers, wind turbine operating companies, and the American Centre for Intelligent Maintenance Systems. CASCADA as an open-source solution for the wind industry can be adopted for WECS [91]. A number of classifiers, including support vector machine (SVM), decision trees, random forests, XGBoost, and LightGBM, can be trained and compared with respect to accuracy, speed, early detection, and effectiveness for SCADA systems with the WEC application, as was performed in [92] for wind turbines.

Based on SKF's established offshore wind industry branch, Marnoch describes the topology of a tidal turbine condition monitoring system [93]. A variety of components are monitored, including generator bearings, gearboxes, shaft misalignments, shaft deflections, mechanical looseness, vibrations of tower blades, and oil quality and level.

Using underwater acoustic emission as a remote condition monitoring technique for WECs is proposed in [70]. Acoustic emission occurs when potential energy is released within a material due to friction. The term acoustic emission is defined as transient elastic waves generated by damage to a material. These waves release energy at frequencies between 100 kHz and 1 MHz [94], while lower frequencies are typically studied by vibration analysis. Acoustic emissions can produce two types of signals: impulsive or continuous signals. Diagnostic techniques typically include signal amplitudes, RMS, energy, kurtosis, crest factor, counts, events, wavelet analysis and fast Fourier transforms (FFT) according to the type of signal [70]. An advantage of this method for WECs is that sound does not attenuate as quickly in water as in air (although underwater higher frequencies attenuate faster than low frequencies). As a result, water acts as a connecting medium and sensors can be placed away from a WEC, where they can monitor multiple parts of the system simultaneously [70].

Currently, there is not enough operational data available in the marine energy industry to establish a comprehensive FMEA for WECs [83]. Nevertheless, an FMEA was performed by Kelly et al. for a WEC, and a list of condition monitoring solutions to cover high, medium, and low-priority failure modes was provided [83].

Sensor fusion techniques are established by combining multiple sensors' outputs, or by collecting signals from a single sensor's output over time, and feeding them to a signal processing or machine learning approach, such as an artificial neural network. Various sensors used in a WEC, such as voltage sensors, proximity sensors, torque sensors, accelerometers, pressure sensors, temperature sensors, ultrasonic level sensors, strain gauges, linear position sensors, GPS, absolute encoders, electrical current sensors, moisture sensors, and humidity sensors, can be used to collect the required signals over time for sensor fusion [22,83]. Wavelet transform, empirical mode decomposition, principal component analysis and Park's vector approach, Fourier transform, fast Fourier transform (FFT), short-time Fourier transform, S-transform, Hilbert transform (HT), Wigner–Ville distribution (WVD), singular value decomposition, principal component analysis (PCA), independent component analysis (ICA), spectral kurtosis (SK), and Kalman filter (KF) are amongst the most common advanced signal processing methods used for condition monitoring [64,95].

In order to reduce the power consumption of offshore WECs, short-range wireless communication with nearshore WECs acting as gateway nodes to the onshore back end is proposed as a proper communication infrastructure, since continuous wireless data transmission over long distances reduces their power output [22].

6. Fault-Tolerant Control for WECs

FTC can be classified as active and passive FTC based on the control strategy [58,96]. It is possible to construct a fault estimation device in the active FTC to estimate the unknown failures in the system, and then, based on the estimated failures, a corresponding control scheme can be designed in accordance with the estimate of the failures. In contrast, passive FTCs do not contain fault estimation links, since the fault system is directly connected to the control module. Hence, the passive FTC has a simple structure and fast operation

speed, which can only handle simple failures [58]. Yu et al. seek to design an efficient FTC for WECs in [58]. A multi-controller FTC is proposed in [33] as the main strategy for improving a two-body point absorber WEC fault tolerance. This is based on adaptive observer-based fault estimation, along with a suitable H_∞ performance index. In addition, the iterative learning approach is applied to this method in order to implement an FTC against actuator faults, such as lock-in-place failures and loss of effectiveness [56]. A WEC device with linear fluctuation can be approximated as a dynamic system with periodic repetitive motions. As a result, an iterative learning control strategy can be selected as an efficient way to keep the WEC system moving in a defined trajectory and quickly achieve zero error tracking. In order to decrease the tracking error, multiple iterative learning-based controllers were constructed based on the multiple tracking errors and input information of the previous times [56].

Alejandro et al. propose a passive FTC for WECs prone to faults in braking subsystems. To achieve robust tracking, they used a nonlinear servo-compensator based on a generalized internal model [52], leading to reduced computational complexity compared with alternative methods like model predictive and adaptive control. WEC excitation force was also introduced as a non-measurable variable as a brake subsystem fault indicator [73].

The FTC design issue for the faulty WEC system is investigated on the basis of a graph–theoretic approach and multivariate time series in [59]. The WEC-Sim open-source modeling platform is used to estimate the performance of a WEC operating with likely device and sensor failures, but faults related to electrical components (such as actuators) cannot be detailed. With WEC-Sim, you can model WEC devices that consist of rigid bodies, joints, PTO systems, and mooring systems as well as sensors and controllers using MATLAB/Simulink simulation software [97]. This project was co-developed by the NREL and Sandia National Laboratories (Sandia) with support from the US Department of Energy's Water and Power Technologies Office [98].

Using reinforcement learning-based control approaches, the control policy is able to learn an objective (e.g., maximizing energy capture) based on experience instead of an explicit model [53,99]. Thus, the learned control policy will incorporate the implicit behavior of the plant without requiring a priori specification of the analytical behavior. In [100], a WEC with two PTOs is designed to simulate the condition in which one of the PTOs fails to operate. In order to deal with PTO failures, a reinforcement learning approach is proposed since they are model-free. Bayesian optimization combined with reinforcement learning is capable of learning and adapting its control function to a dynamic environment without requiring extensive domain knowledge.

Mohsen et al. proposed an improved direct model predictive control to maintain the stability of an Archimedes wave swing system under different constant power load demands and systems faults. It improves the robustness and fault-tolerant capability of the system in regular and irregular waves even in the loss of one leg in the power electronic converter [101].

Redundancy for components such as motion measurements, displacement, and acceleration is a common solution to increase availability and reliability. Having redundancy ensures that valid information is accessible even if some transducers fail [102]. By having a fault detection, isolation, and reconstruction unit, switching between parallel units can be accomplished in order to avoid failure in the whole system's operation. Cost, space, and weight of extra components are disadvantages of this method. FTCs without extra weights and costs can be achieved by using analytical redundancy [103]. Patton establishes a FTC with analytical redundancy by using different methods to estimate excitation force instead of measurement for actuator faults [104,105].

It was suggested by Baker et al. to use a Vernier-hybrid machine as the electrical generator for low-speed, high-torque applications like WECs [106]. Compared to other machines developing similar torque, this machine has a high inductance. In spite of the fact that it requires an over-rated power converter, this application gives the machine fault tolerance and soft control features. Additionally, each stator module can have its

own co-located power converter, minimizing current loops. In addition to fault tolerance, system availability will also improve as converter failures reduce the output power without disabling the whole system.

When there are brake faults, the linear generator can compensate for the deviation of the damping force by injecting a force that is controlled to maximize energy conversion under nominal conditions. An Utkin-based unknown input observer is used in this active FTC method to estimate the force deviation from a fault detection and isolation (FDI) module, which is then used for compensation [107].

Power converter failures account for almost half (48%) of the electrical system failures of wind turbines among the failures related to the electronic subassembly [108]. WECs should follow a similar pattern.

One of the fault-tolerant solutions that can be applied when one of the six switches or one of the converter legs is damaged is the three-phase four-switch converter [109]. The midpoint of the DC link should be connected to the faulty phase, while the other four switches continue to function. Despite the converter's ability to work with only four switches, unbalanced currents and high-power ripples may occur in the system if the control is not designed for this type of fault. In [110], this topology is proposed in a model-predictive control approach to have a fault-tolerant WEC against open-circuit or short-circuit faults.

Ref. [60] proposes an active FTC to increase WEC reliability, which will reduce downtime when a fault occurs at any of the voltage source converters, either machine-side converters or grid-side converters, or even at both. With some restrictions, the power converter can keep extracting energy from the WEC and sending it to the grid. This reduces downtime and the urgency for the repair team to reach the WEC.

A Bayesian policy gradient-based WEC control approach was presented by Leila et al., which is responsive and adaptable to faults in controller feedback, controller actuation, and changes in the plant model [53]. In the event of information loss from one or two sensors, the proposed control adapts its policy effectively by using a model-free reinforcement learning control method.

7. Future Research Direction

Based on the papers published to date, there are some potential research topics in condition monitoring and fault diagnosis in WECs. WEC actuators and sensors are the most commonly affected by wear and corrosion, as mentioned previously. Electrical actuators and sensors have been extensively studied, and the proposed method can be applied to WECs.

The use of signal-based methods for fault detection in motor-drive systems has been developed for years, but they are not currently being used in WECs due to accessibility and noise issues. In the WECs, these methods would be followed through remote communication and online condition-based monitoring. Moreover, WT, WVD, and HT should be more focused on as part of the application of signal processing methods.

There are several ways to utilize SCADA data for condition monitoring of WECs: (a) trending, (b) clustering, (c) NBM, (d) damage modeling, and (e) assessment of alarms and expert systems, as seen in wind turbines [6]. Figure 4 illustrates a probability-based Venn diagram for wind turbines based on SCADA outputs. With the experience gained from wind turbines, SCADA solutions for WECs need to be developed based on the wind turbine experience.

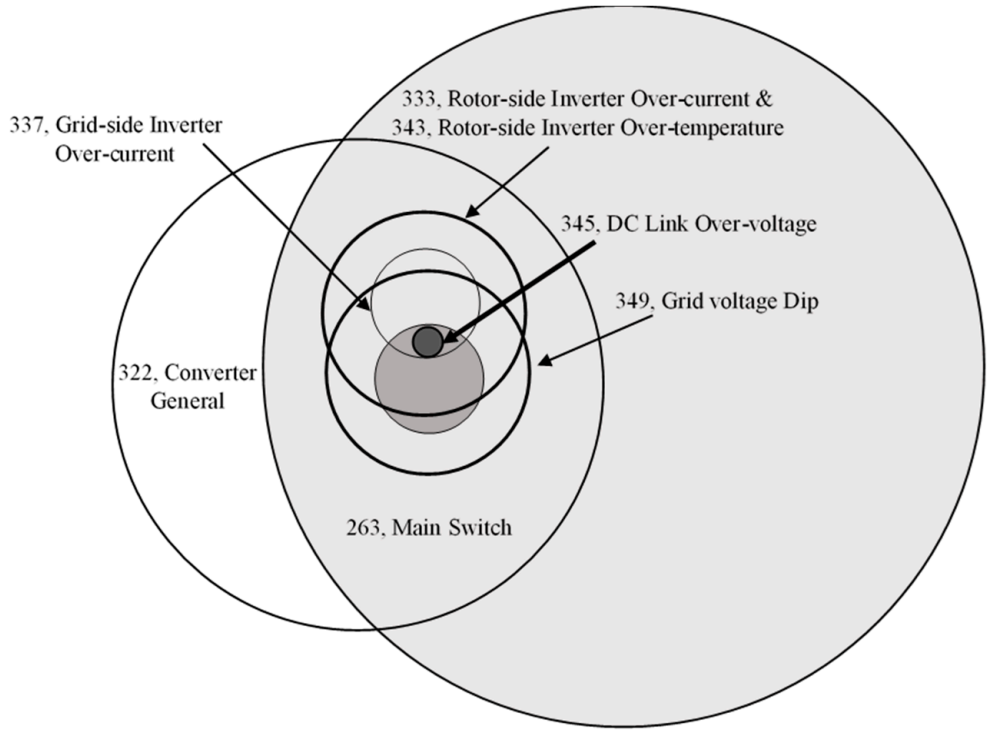

Figure 4. Probability-based Venn diagram for wind turbines [111].

8. Conclusions

This paper examines various aspects of WECs, including condition monitoring, fault detection, isolation, and fault-tolerant control. The commercial viability of wave energy projects has been limited by high operational and maintenance costs, making it essential to develop effective strategies for monitoring and managing faults. As a result of a lack of design consensus within the WEC design, it becomes challenging to provide a standardized condition monitoring package for all devices.

The reliability and efficiency of WECs are largely determined by the condition monitoring of their equipment. Different techniques, such as vibration monitoring, temperature sensing, and underwater acoustic emission, have been proposed for detecting the early stages of component failures and potential faults. Sensor fusion approaches, combining data from multiple sensors, offer comprehensive insights into WEC conditions, allowing for proactive maintenance planning and reduced downtime. The O&M costs of WECs could be reduced by reducing downtime for repairs and maintenance through predictive maintenance.

FDIR units are essential for enhancing WEC reliability. Model-based and signal-based techniques have been explored for detecting faults in WEC systems, and the development of comprehensive reliability models is a critical step in implementing effective FDIR systems.

FTC strategies have been reviewed to ensure reliable energy generation. Active and passive FTC approaches have been discussed, incorporating fault estimation, analytical redundancy, and switching strategies to maintain stability and performance under fault conditions.

Advancements in fault-tolerant control and condition monitoring techniques are crucial in making wave energy a more viable and competitive renewable energy source. However, further research and development are still needed to establish comprehensive reliability models and optimize fault-tolerant control strategies for WECs. By addressing these challenges, we can move closer to realizing the full potential of wave energy and contributing significantly to the global renewable energy transition.

Wave and wind energy technologies share many similarities. Therefore, the condition monitoring and maintenance techniques developed for wind energy, especially offshore

wind turbines, can be applied here. However, wave energies face greater challenges here because of erosion and survivability issues. There is a lack of attention on signal-based fault detection in WECs, which is less widely used than model-based fault detection.

Funding: This project has received funding from the UK Engineering and Physical Sciences Research Council under grant agreement No. EP/V040987/1.

Conflicts of Interest: The authors declare no conflict of interest.

Abbreviations

AWS	Archimedes wave swing
COE	Cost of energy
CPU	Central processing unit
DFIG	Doubly-fed induction generator
DSC	Digital signal controller
EPSRC	Engineering and Physical Sciences Research Council
ETA	Event tree analysis
FDIR	Fault detection, isolation and reconstruction
FFDM	Function failure design method
FFIP	Function failure identification and propagation
FFT	Fast Fourier transform
FMEA	Failure modes and effects analysis
FTA	Fault tree analysis
FTC	Fault-tolerant control
HAPIWEC	Holistic advanced prototyping and interfacing for wave energy control
HT	Hilbert transform
ICA	Independent component analysis
KF	Kalman filter
LCOE	Levelized cost of energy
MCSA	Machine current signature analysis
NREL	National renewable energy laboratory
O&M	Operation and maintenance
OPEX	Operational expenses
PCA	Principal component analysis
PMSG	Permanent magnet synchronous generator
PTO	Power take-off
SCADA	Supervisory control and data acquisition
SK	Spectral kurtosis
SVM	Support vector machine
TRL	Technology readiness level
WEC	Wave energy converter
WVD	Wigner–Ville distribution

References

1. Poguluri, S.; Bae, Y. A Study on Performance Assessment of WEC Rotor in the Jeju Western Waters. *Ocean Syst. Eng.* **2018**, *8*, 361–380.
2. Fan, Y.; Mu, A.; Ma, T. Design and control of a point absorber wave energy converter with an open loop hydraulic transmission. *Energy Convers. Manag.* **2016**, *121*, 13–21. [CrossRef]
3. Patil, V.C.; Ro, P.I. Modeling of liquid-piston based design for isothermal ocean compressed air energy storage system. *J. Energy Storage* **2020**, *31*, 101449. [CrossRef]
4. Tokat, P. *Performance Evaluation and Life Cycle Cost Analysis of the Electrical Generation Unit of a Wave Energy Converter*; Chalmers Tekniska Hogskola: Gothenburg, Sweden, 2018.
5. Magagna, D.; Uihlein, A. Ocean energy development in Europe: Current status and future perspectives. *Int. J. Mar. Energy* **2015**, *11*, 84–104. [CrossRef]
6. Spotlight on Ocean Energy. 2018. Available online: https://tethys.pnnl.gov/sites/default/files/publications/OES-2018.pdf (accessed on 12 September 2023).

7. Têtu, A. Power Take-Off Systems for WECs. In *Handbook of Ocean Wave Energy*; Springer Nature: Berlin/Heidelberg, Germany, 2016; pp. 203–220. [CrossRef]
8. Wave and Tidal Energy: Part of the UK's Energy Mix. Available online: https://www.gov.uk/guidance/wave-and-tidal-energy-part-of-the-uks-energy-mix (accessed on 12 September 2023).
9. Babarit, A. *Ocean Wave Energy Conversion: Resource, Technologies and Performance*; Elsevier: Amsterdam, The Netherlands, 2017.
10. Ringwood, J.V. Wave energy control: Status and perspectives 2020. *IFAC Pap.* **2020**, *53*, 12271–12282. [CrossRef]
11. Handoko, C.R. The development of power take-off technology in wave energy converter systems: A Review. *IOP Conf. Ser. Earth Environ. Sci.* **2021**, *739*, 012081. [CrossRef]
12. Gaebele, D.T.; Magana, M.E.; Brekken, T.K.A.; Henriques, J.C.C.; Carrelhas, A.A.D.; Gato, L.M.C. Second Order Sliding Mode Control of Oscillating Water Column Wave Energy Converters for Power Improvement. *IEEE Trans. Sustain. Energy* **2020**, *12*, 1151–1160. [CrossRef]
13. Cradden, L.; Syrda, P.; Riordan, C.; Ingram, D. Accessibility risk for offshore platforms during maintenance. In Proceedings of the European Wave and Tidal Energy Conference, Aalborg, Denmark, 2–5 September 2013.
14. O'Connor, M.; Lewis, T.; Dalton, G. Weather Window Analysis of Irish and Portuguese Wave Data with Relevance to Operations and Maintenance of Marine Renewables. In Proceedings of the International Conference on Offshore Mechanics and Arctic Engineering—OMAE, Nantes, France, 9–14 June 2013. [CrossRef]
15. Ambühl, S.; Kramer, M.; Kofoed, J.P.; Sørensen, J.D. Reliability assessment of wave energy devices. In Proceedings of the 4th International Conference on Ocean Energy, Southampton, UK, 17–19 October 2012.
16. Torre-Enciso, Y.; Ortubia, I.; De Aguileta, L.L.; Marqués, J. Mutriku wave power plant: From the thinking out to the reality. In Proceedings of the 8th European Wave and Tidal Energy Conference, Uppsala, Sweden, 7–10 September 2009; Volume 710, pp. 319–329.
17. Ambühl, S.; Marquis, L.; Kofoed, J.P.; Sørensen, J.D. Operation and maintenance strategies for wave energy converters. *Proc. Inst. Mech. Eng. Part O J. Risk Reliab.* **2015**, *229*, 417–441. [CrossRef]
18. Entec, U. Cost Estimation Methodology: The Marine Energy Challenge Approach of Energy Produced by Marine Energy Systems; Commissioned by The Carbon Trust, Ed.; 2006. Available online: https://www.carbontrust.com/our-work-and-impact/guides-reports-and-tools/marine-cost-of-energy-methodology (accessed on 12 September 2023).
19. Gray, A.; Findlay, D.; Johanning, L. *Operations and Maintenance Planning for Community-Scale, Off-Grid Wave Energy Devices*; CRC Press: Boca Raton, FL, USA, 2016.
20. Abdulla, K.; Skelton, J.; Doherty, K.; O'Kane, P.; Doherty, R.; Bryans, G. Statistical availability analysis of wave energy converters. In Proceedings of the ISOPE International Ocean and Polar Engineering Conference, Maui, HI, USA, 19–24 June 2011; p. ISOPE-I-11–553.
21. Gray, A.; Johanning, L.; Dickens, B. The Modelling of Pelamis Wave Power's Operations & Maintenance Strategy. In Proceedings of the ASRANet International Conference on Offshore Renewable Energy, Glasgow, UK, 15–17 September 2014; pp. 15–17.
22. Johanson, M.; von Hacht, A.; Strang-Moran, C.; Hüffmeier, J.; Johannesson, P. Condition monitoring for wave energy converters. In Proceedings of the 12th European Wave and Tidal Energy Conference (EWTEC 2019), Naples, Italy, 1–6 September 2019; Volume 2019.
23. Aderinto, T.; Li, H. Review on Power Performance and Efficiency of Wave Energy Converters. *Energies* **2019**, *12*, 4329. [CrossRef]
24. de Andres, A.; Medina-Lopez, E.; Crooks, D.; Roberts, O.; Jeffrey, H. On the reversed LCOE calculation: Design constraints for wave energy commercialization. *Int. J. Mar. Energy* **2017**, *18*, 88–108. [CrossRef]
25. Ringwood, J.; Simani, S. Overview of modelling and control strategies for wind turbines and wave energy devices: Comparisons and contrasts. *Annu. Rev. Control* **2015**, *40*, 27–49. [CrossRef]
26. Charlier, R.H.; Justus, J.R. *Ocean Energies: Environmental, Economic and Technological Aspects of Alternative Power Sources*; Elsevier: Amsterdam, The Netherlands, 1993.
27. Chowdhury, M.S.; Rahman, K.S.; Selvanathan, V.; Nuthammachot, N.; Suklueng, M.; Mostafaeipour, A.; Habib, A.; Akhtaruzzaman, M.; Amin, N.; Techato, K. Current trends and prospects of tidal energy technology. *Environ. Dev. Sustain.* **2020**, *23*, 8179–8194. [CrossRef] [PubMed]
28. Wang, G.; Yang, Y.; Wang, S. Ocean thermal energy application technologies for unmanned underwater vehicles: A comprehensive review. *Appl. Energy* **2020**, *278*, 115752. [CrossRef]
29. Herrera, J.; Sierra, S.; Ibeas, A. Ocean Thermal Energy Conversion and Other Uses of Deep Sea Water: A Review. *J. Mar. Sci. Eng.* **2021**, *9*, 356. [CrossRef]
30. Han, X.-W.; Zhang, W.-B.; Ma, X.-J.; Zhou, X.; Zhang, Q.; Bao, X.; Guo, Y.-W.; Zhang, L.; Long, J. Review—Technologies and Materials for Water Salinity Gradient Energy Harvesting. *J. Electrochem. Soc.* **2021**, *168*, 090505. [CrossRef]
31. Khan, M.Z.A.; Khan, H.A.; Aziz, M. Harvesting Energy from Ocean: Technologies and Perspectives. *Energies* **2022**, *15*, 3456. [CrossRef]
32. Curto, D.; Franzitta, V.; Guercio, A. Sea Wave Energy. A Review of the Current Technologies and Perspectives. *Energies* **2021**, *14*, 6604. [CrossRef]
33. Xu, N.; Chen, L.; Yang, R.; Zhu, Y. Multi-controller-based fault tolerant control for systems with actuator and sensor failures: Application to 2-body point absorber wave energy converter. *J. Frankl. Inst.* **2022**, *359*, 5919–5934. [CrossRef]

34. Clément, A.; McCullen, P.; Falcão, A.; Fiorentino, A.; Gardner, F.; Hammarlund, K.; Lemonis, G.; Lewis, T.; Nielsen, K.; Petroncini, S.; et al. Wave energy in Europe: Current status and perspectives. *Renew. Sustain. Energy Rev.* **2002**, *6*, 405–431. [CrossRef]
35. Pelc, R.; Fujita, R.M. Renewable energy from the ocean. *Mar. Policy* **2002**, *26*, 471–479. [CrossRef]
36. Drew, B.; Plummer, A.R.; Sahinkaya, M.N. A review of wave energy converter technology. *Proc. Inst. Mech. Eng. Part A J. Power Energy* **2009**, *223*, 887–902. [CrossRef]
37. Veigas, M.; López, M.; Iglesias, G. Assessing the optimal location for a shoreline wave energy converter. *Appl. Energy* **2014**, *132*, 404–411. [CrossRef]
38. Abu Hasim, A.S.; Ishak, A.M.; Burhanudin, J.; Dardin, S.M.F.B.S.M. A Review of Power Electronics for Nearshore Wave Energy Converter Applications. *IEEE Access* **2022**, *10*, 16670–16680. [CrossRef]
39. Ruol, P.; Zanuttigh, B.; Martinelli, L.; Kofoed, P.; Frigaard, P. Near-shore floating wave energy converters: Applications for coastal protection. *Coast. Eng. Proc.* **2011**, *1*, 61. [CrossRef]
40. Igic, P.; Zhou, Z.; Knapp, W.; MacEnri, J.; Sørensen, H.; Friis-Madsen, E. Multi-megawatt offshore wave energy converters—Electrical system configuration and generator control strategy. *IET Renew. Power Gener.* **2011**, *5*, 10–17. [CrossRef]
41. Liao, Z.; Sun, T.; Al-Ani, M.; Jordan, L.-B.; Li, G.; Wang, Z.; Belmont, M.; Edwards, C. Modelling and Control Tank Testing Validation for Attenuator Type Wave Energy Converter—Part I: Experiment Setup and Control-Oriented Modelling. *IEEE Trans. Sustain. Energy* **2023**, *14*, 1747–1757. [CrossRef]
42. Guo, B.; Wang, T.; Jin, S.; Duan, S.; Yang, K.; Zhao, Y. A Review of Point Absorber Wave Energy Converters. *J. Mar. Sci. Eng.* **2022**, *10*, 1534. [CrossRef]
43. Suzuki, M.; Arakawa, C. Numerical methods to predict characteristics of oscillating water column for terminator type of wave energy converter. In Proceedings of the ISOPE International Ocean and Polar Engineering Conference, Honolulu, HI, USA, 25–30 May 2003; p. ISOPE-I-03–050.
44. Zhao, X.L.; Ning, D.Z.; Zou, Q.P.; Qiao, D.S.; Cai, S.Q. Hybrid floating breakwater-WEC system: A review. *Ocean Eng.* **2019**, *186*, 106126. [CrossRef]
45. Falcão, A.F.O.; Henriques, J.C.C. Oscillating-water-column wave energy converters and air turbines: A review. *Renew. Energy* **2016**, *85*, 1391–1424. [CrossRef]
46. Zanuttigh, B.; Angelelli, E.; Kofoed, J.P. Effects of mooring systems on the performance of a wave activated body energy converter. *Renew. Energy* **2013**, *57*, 422–431. [CrossRef]
47. Liu, Z.; Han, Z.; Shi, H.; Yang, W. Experimental study on multi-level overtopping wave energy convertor under regular wave conditions. *Int. J. Nav. Arch. Ocean Eng.* **2018**, *10*, 651–659. [CrossRef]
48. *IEC TS 62600–2:2019*; Marine Energy—Wave, Tidal and Other Water Current Converters. IEC: Geneva, Switzerland, 2019. Available online: https://webstore.iec.ch/publication/62399 (accessed on 12 September 2023).
49. Val, D.V. Reliability of Marine Energy Converters. *Energies* **2023**, *16*, 3387. [CrossRef]
50. Ahamed, R.; McKee, K.; Howard, I. Advancements of wave energy converters based on power take off (PTO) systems: A review. *Ocean Eng.* **2020**, *204*, 107248. [CrossRef]
51. Liu, Z.; Zhang, R.; Xiao, H.; Wang, X. Survey of the mechanisms of power take-off (PTO) devices of wave energy converters. *Acta Mech. Sin.* **2020**, *36*, 644–658. [CrossRef]
52. González-Esculpi, A.; Verde, C.; Maya-Ortiz, P. Nonlinear servocompensator for fault-tolerant control of a wave energy converter. *J. Frankl. Inst.* **2023**, *360*, 8339–8362. [CrossRef]
53. Zadeh, L.G.; Brekken, T.K.; Fern, A.; Shahbaz, A.H. Hardware in the Loop Wave Energy Converter Control under Control Faults and Model Mismatch. *IEEE Trans. Sustain. Energy* **2023**, 1–10. [CrossRef]
54. Fusco, F.; Ringwood, J.V. Hierarchical Robust Control of Oscillating Wave Energy Converters with Uncertain Dynamics. *IEEE Trans. Sustain. Energy* **2014**, *5*, 958–966. [CrossRef]
55. Wu, F.; Zhang, X.P.; Ju, P.; Sterling, M.J.H. Optimal Control for AWS-Based Wave Energy Conversion System. *IEEE Trans. Power Syst.* **2009**, *24*, 1747–1755. [CrossRef]
56. Xu, N.; Zhu, Y.; Yang, R.; Chen, X.; Su, C.-Y. Adaptive Fault-Tolerant Control for a 2-Body Point Absorber Wave Energy Converter Against Actuator Faults: An Iterative Learning Control Approach. *IEEE Trans. Sustain. Energy* **2023**, *14*, 1664–1675. [CrossRef]
57. Thies, P.R. *Advancing Reliability Information for Wave Energy Converters*; University of Exeter: Exeter, UK, 2012.
58. Yu, Z.; Zhang, Y.; Liu, Z.; Qu, Y.; Su, C.-Y.; Jiang, B. Decentralized finite-time adaptive fault-tolerant synchronization tracking control for multiple UAVs with prescribed performance. *J. Frankl. Inst.* **2019**, *357*, 11830–11862. [CrossRef]
59. Tang, Y.; Huang, Y.; Lindbeck, E.; Lizza, S.; VanZwieten, J.; Tom, N.; Yao, W. WEC fault modelling and condition monitoring: A graph-theoretic approach. *IET Electr. Power Appl.* **2020**, *14*, 781–788. [CrossRef]
60. Ramirez, D.; Blanco, M.; Zarei, M.E.; Gupta, M. Robust control of a floating OWC WEC under open-switch fault condition in one or in both VSCs. *IET Renew. Power Gener.* **2020**, *14*, 2538–2549. [CrossRef]
61. Henderson, R. Design, simulation, and testing of a novel hydraulic power take-off system for the Pelamis wave energy converter. *Renew. Energy* **2006**, *31*, 271–283. [CrossRef]
62. Edwards, K.; Mekhiche, M. Ocean Power Technologies Powerbuoy®: System-Level Design, Development and Validation Methodology. In Proceedings of the 2nd Marine Energy Technology Symposium METS2014, Seattle, WA, USA, 15–18 April 2014; Available online: https://vtechworks.lib.vt.edu/handle/10919/49232 (accessed on 12 September 2023).

63. Renewable Energy, Salter's Nodding Duck. Available online: https://baonguyen1994.wordpress.com/introduction-to-wave-energy/ocean-wave-technologies/terminators/salters-nodding-duck/ (accessed on 6 September 2023).
64. Mortazavizadeh, S.A.; Mousavi, S.M.G. A Review on Condition Monitoring and Diagnostic Techniques of Rotating Electrical Machines. *Phys. Sci. Int. J.* **2014**, *4*, 310–338. [CrossRef]
65. Mérigaud, A.; Ringwood, J.V. Condition-based maintenance methods for marine renewable energy. *Renew. Sustain. Energy Rev.* **2016**, *66*, 53–78. [CrossRef]
66. Weber, J. WEC Technology Readiness and Performance Matrix–finding the best research technology development trajectory. In Proceedings of the 4th International Conference on Ocean Energy, Dublin, Ireland, 17–19 October 2012; Volume 17.
67. Price, A.; Campos-Gaona, D.; McCallum, P.; Yazdanpanah, R.; Mortazavizadeh, S.A. HAPiWEC: Towards a Rapid Prototyping Rig for Wave Energy Control Co-Design and Testing. In Proceedings of the OCEANS 2023-Limerick, Limerick, Ireland, 5–8 June 2023; pp. 1–9. [CrossRef]
68. Stock, A. Holistic Advanced Prototyping and Interfacing for Wave Energy Control. In *Supergen ORE Hub Annual Assembly*; Supergen ORE Hub Annual Assembly—University of Oxford: Oxford, UK, 29 September 2022.
69. Price, A.; Campos-Gaona, D.; Davey, T.; Forehand, D.; Giles, T.; McCallum, P.; McDonald, A.; Onslow, M.; Sellar, B.; Stock, A.; et al. HAPiGYM: Two Rapid Prototyping Environments for Wave Energy Control. In Proceedings of the 15th European Wave and Tidal Energy Conference EWTEC, Bilbao, Spain, 3–7 September 2023.
70. Walsh, J.; Bashir, I.; Thies, P.R.; Johanning, L.; Blondel, P. Acoustic emission health monitoring of marine renewables: Illustration with a wave energy converter in Falmouth Bay (UK). In Proceedings of the OCEANS 2015, Genova, Italy, 18–21 May 2015; pp. 1–7. [CrossRef]
71. Tran, T.T.; Krueger, A.M.; Gunawan, B.; Alam, M.-R. *Predicting the Dynamic Characteristics of a Fully Submerged Wave Energy Converter Subjected to a Power Take-Off Failure Using a High-Fidelity Computational Fluid Dynamics Model*; Sandia National Lab. (SNL-NM): Albuquerque, NM, USA, 2019.
72. Zhang, Y.; Zeng, T.; Gao, Z. Fault Diagnosis and Fault-Tolerant Control of Energy Maximization for Wave Energy Converters. *IEEE Trans. Sustain. Energy* **2022**, *13*, 1771–1778. [CrossRef]
73. González-Esculpi, A.; Verde, C.; Maya-Ortiz, P. Comparison of Estimates of the Excitation Force for Fault Diagnosis in a Wave Energy Converter. *IFAC Pap.* **2022**, *55*, 396–401. [CrossRef]
74. Hodgins, N.; Mueller, M.; Tease, W.; Staton, D. Measurement and modelling of induction generator performance in an oscillating water column wave energy converter. In Proceedings of the 2008 4th IET Conference on Power Electronics, Machines and Drives, York, UK, 2–4 April 2008. [CrossRef]
75. Strömstedt, E.; Savin, A.; Svensson, O.; Leijon, M. Time Series-, Time-Frequency- and Spectral Analyses of Sensor Measurements in an Offshore Wave Energy Converter Based on Linear Generator Technology. *Energy Power Eng.* **2013**, *05*, 70–91. [CrossRef]
76. Garrido, I.; Garrido, A.J.; Lekube, J.; Otaola, E.; Carrascal, E. Oscillating water column control and monitoring. In Proceedings of the OCEANS 2016 MTS/IEEE Monterey, Monterey, CA, USA, 19–23 September 2016; pp. 1–6. [CrossRef]
77. Verde, C.; Maya-Ortiz, P. FDI Study for a Wave Energy Converter by Structural Analysis. *IFAC Pap.* **2020**, *53*, 13721–13726. [CrossRef]
78. Brown, A.; Tumer, I.Y.; Paasch, R. Early Stage Failure Modeling and Analysis Applied to a Wave Energy Converter. In Proceedings of the International Design Engineering Technical Conferences and Computers and Information in Engineering Conference, New York, NY, USA, 3–6 August 2008; Volume 43284, pp. 469–479.
79. Hillis, A.; Yardley, J.; Plummer, A.; Chapman, J. The impact of modelling and prediction errors on the performance of optimally controlled multi-DOF wave energy converters. *IFAC Pap.* **2020**, *53*, 12265–12270. [CrossRef]
80. Elasha, D.M.F.; Teixeira, J.A. Condition monitoring philosophy for tidal turbines. *Int. J. Perform. Eng.* **2014**, *10*, 521.
81. Hess, A.; Stecki, J.S.; Rudov-Clark, S.D. The maintenance aware design environment: Development of an aerospace phm software tool. *Proc. PHM08* **2008**, *16*, 17.
82. Rudov-Clark, S.; Stecki, J. The language of FMEA: On the effective use and reuse of FMEA data. In Proceedings of the Sixth DSTO International Conference on Health & Usage Monitoring, Melbourne, Australia, 6–9 March 2009; pp. 9–12.
83. Kenny, C.; Findlay, D.; Lazakis, I.; Shek, J.; Thies, P. *Development of a Condition Monitoring System for an Articulated Wave Energy Converter*; University of Exeter: Exeter, UK, 2016.
84. Garcia Márquez, F.P.; Tobias, A.M.; Pérez, J.M.P.; Papaelias, M. Condition monitoring of wind turbines: Techniques and methods. *Renew. Energy* **2012**, *46*, 169–178. [CrossRef]
85. Kusiak, A.; Zhang, Z.; Verma, A. Prediction, operations, and condition monitoring in wind energy. *Energy* **2013**, *60*, 1–12. [CrossRef]
86. Tautz-Weinert, J.; Watson, S.J. Using SCADA data for wind turbine condition monitoring–A review. *IET Renew. Power Gener.* **2016**, *11*, 382–394. [CrossRef]
87. Yang, W.; Court, R.; Jiang, J. Wind turbine condition monitoring by the approach of SCADA data analysis. *Renew. Energy* **2013**, *53*, 365–376. [CrossRef]
88. Kim, K.; Parthasarathy, G.; Uluyol, O.; Foslien, W.; Sheng, S.; Fleming, P. Use of SCADA Data for Failure Detection in Wind Turbines. In Proceedings of the on Energy Sustainability Conference and Fuel Cell Conference, Washington, DC, USA, 7–10 August 2011; pp. 2071–2079.

89. Zaher, A.; McArthur, S.; Infield, D.; Patel, Y. Online wind turbine fault detection through automated SCADA data analysis. *Wind Energy Int. J. Prog. Appl. Wind Power Convers. Technol.* **2009**, *12*, 574–593. [CrossRef]
90. Chen, B.; Zappalá, D.; Crabtree, C.J.; Tavner, P.J. *Survey of Commercially Available SCADA Data Analysis Tools for Wind Turbine Health Monitoring*; Durham University: Durham, UK, 2014. Available online: https://research.tudelft.nl/en/publications/survey-of-commercially-available-scada-data-analysis-tools-for-wi (accessed on 12 September 2023).
91. Zappalá, D.; Tavner, P.J. *Reliability and Condition Monitoring, in UK Wind Energy Technologies*; Routledge: London, UK, 2016; pp. 100–160.
92. Wang, L.; Jia, S.; Yan, X.; Ma, L.; Fang, J. A SCADA-Data-Driven Condition Monitoring Method of Wind Turbine Generators. *IEEE Access* **2022**, *10*, 67532–67540. [CrossRef]
93. Marnoch, J. What should a condition monitoring system look like for a tidal turbine. In Proceedings of the International Conference on Ocean Energy, Busan, Republic of Korea, 19–24 June 2016.
94. Mba, D.; Rao, R.B. Development of acoustic emission technology for condition monitoring and diagnosis of rotating machines: Bearings, pumps, gearboxes, engines, and rotating structures. *Shock Vib. Dig.* **2006**, *38*, 3–16. [CrossRef]
95. Jaros, R.; Byrtus, R.; Dohnal, J.; Danys, L.; Baros, J.; Koziorek, J.; Zmij, P.; Martinek, R. Advanced Signal Processing Methods for Condition Monitoring. *Arch. Comput. Methods Eng.* **2022**, *30*, 1553–1577. [CrossRef]
96. Schulte, H.; Gauterin, E. Input-to-State Stability Condition for Passive Fault-Tolerant Control of Wave and Wind Energy Converters. *IFAC Pap.* **2015**, *48*, 257–262. [CrossRef]
97. Lawson, M.; Yu, Y.-H.; Ruehl, K.; Michelen, C. Development and Demonstration of the WEC-Sim Wave Energy Converter Simulation Tool. In Proceedings of the 2nd Marine Energy Technology Symposium METS2014, Seattle, WA, USA, 15–18 April 2014; Available online: https://vtechworks.lib.vt.edu/handle/10919/49236 (accessed on 12 September 2023).
98. Ogden, D.; Ruehl, K.; Yu, Y.-H.; Keester, A.; Forbush, D.; Leon, J.; Tom, N. Review of WEC-Sim development and applications. *Int. Mar. Energy J.* **2022**, *5*, 293–303. [CrossRef]
99. Anderlini, E.; Husain, S.; Parker, G.G.; Abusara, M.; Thomas, G. Towards Real-Time Reinforcement Learning Control of a Wave Energy Converter. *J. Mar. Sci. Eng.* **2020**, *8*, 845. [CrossRef]
100. Zadeh, L.G.; Brekken, T.K.; Fern, A. Resilient Control of a Wave Energy Converter under PTO Fault Conditions. *IFAC Pap.* **2022**, *55*, 144–149. [CrossRef]
101. Adaryani, M.R.; Taher, S.A.; Guerrero, J.M. Improved direct model predictive control for variable magnitude variable frequency wave energy converter connected to constant power load. *J. Energy Storage* **2021**, *43*, 103175. [CrossRef]
102. Blaabjerg, F.; Liu, H.; Loh, P.C. Marine energy generation systems and related monitoring and control. *IEEE Instrum. Meas. Mag.* **2014**, *17*, 27–32. [CrossRef]
103. Signorelli, C.D.; Basu, B. *Optimal Real-Time Predictive Control for Maximising the Power-Take-Off Efficiency of the WaveRAM Wave Energy Converter*; Trinity College Dublin: Dublin, Ireland, 2018.
104. Abdelrahman, M.; Patton, R.; Guo, B.; Lan, J. Estimation of wave excitation force for wave energy converters. In Proceedings of the 2016 3rd Conference on Control and Fault-Tolerant Systems (SysTol), Barcelona, Spain, 7–9 September 2016; pp. 654–659. [CrossRef]
105. Patton, R.J. Fault Tolerant Control in Marine Energy Systems: A Wave Energy Perspective. In Proceedings of the Maynooth Wave Energy Workshop, Maynooth, Ireland, 20 January 2017; Available online: https://coer.maynoothuniversity.ie/wp-content/uploads/2017/08/Patton_Presentation.pdf (accessed on 12 September 2023).
106. Baker, N.J.; Chambers, L.; Asker, F.; Retzler, C.; Galbraith, M.; Spooner, E.; Moore, D. Development of a direct drive power take off system for a hinged wave energy converter. In Proceedings of the 11th International Conference on Renewable Power Generation-Meeting Net Zero Carbon (RPG 2022), Online, 22–23 September 2022; Volume 2022, pp. 28–32.
107. Gonzalez-Esculpi, A.; Verde, C.; Maya-Ortiz, P. Fault-Tolerant Control for a Wave Energy Converter by Damping Injection. In Proceedings of the 2021 IEEE Conference on Control Technology and Applications (CCTA), San Diego, CA, USA, 9–11 August 2021; pp. 673–678. [CrossRef]
108. Johannesson, P.; Svensson, T.; Santandrea, F.; Ng, C.; Jia, C.; Buck, E.; Shanks, A. *Reliability Guidance for Marine Energy Converters*; Report RiaSoR (Reliability in a Sea of Risk); RiaSoR: Coruña, Spain, 2016; Available online: http://riasor.com/wp-content/uploads/2016/12/ReliabilityGuidanceMECs_v1.0_20161216.pdf (accessed on 12 September 2023).
109. Freire, N.M.A.; Cardoso, A.J.M. A Fault-Tolerant Direct Controlled PMSG Drive for Wind Energy Conversion Systems. *IEEE Trans. Ind. Electron.* **2013**, *61*, 821–834. [CrossRef]
110. Zarei, M.E.; Ramirez, D.; Nicolas, C.V.; Arribas, J.R. Three-Phase Four-Switch Converter for SPMS Generators Based on Model Predictive Current Control for Wave Energy Applications. *IEEE Trans. Power Electron.* **2019**, *35*, 289–302. [CrossRef]
111. Qiu, Y.; Feng, Y.; Tavner, P.; Richardson, P.; Erdős, F.G.; Chen, B. Wind turbine SCADA alarm analysis for improving reliability. *Wind Energy* **2012**, *15*, 951–966. [CrossRef]