Reference Model 5 (RM5): Oscillating Surge Wave Energy Converter

Y.-H. Yu, D.S. Jenne, and R. Thresher
National Renewable Energy Laboratory

A. Copping, S. Geerlofs, and L.A. Hanna
Pacific Northwest National Laboratory

NREL is a national laboratory of the U.S. Department of Energy
Office of Energy Efficiency & Renewable Energy
Operated by the Alliance for Sustainable Energy, LLC

This report is available at no cost from the National Renewable Energy Laboratory (NREL) at www.nrel.gov/publications.

Technical Report
NREL/TP-5000-62861
January 2015

Contract No. DE-AC36-08GO28308

Reference Model 5 (RM5): Oscillating Surge Wave Energy Converter

Y.-H. Yu, D.S. Jenne, and R. Thresher
National Renewable Energy Laboratory

A. Copping, S. Geerlofs, and L.A. Hanna
Pacific Northwest National Laboratory

Prepared under Task No. WA14.1A01

NREL is a national laboratory of the U.S. Department of Energy
Office of Energy Efficiency & Renewable Energy
Operated by the Alliance for Sustainable Energy, LLC

This report is available at no cost from the National Renewable Energy Laboratory (NREL) at www.nrel.gov/publications.

National Renewable Energy Laboratory
15013 Denver West Parkway
Golden, CO 80401
303-275-3000 • www.nrel.gov

Technical Report
NREL/TP-5000-62861
January 2015

Contract No. DE-AC36-08GO28308

This report is available at no cost from the National Renewable Energy Laboratory (NREL) at www.nrel.gov/publications.

Available electronically at http://www.osti.gov/scitech

Available for a processing fee to U.S. Department of Energy and its contractors, in paper, from:

U.S. Department of Energy
Office of Scientific and Technical Information
P.O. Box 62
Oak Ridge, TN 37831-0062
phone: 865.576.8401
fax: 865.576.5728
email: mailto:reports@adonis.osti.gov

Available for sale to the public, in paper, from:

U.S. Department of Commerce
National Technical Information Service
5285 Port Royal Road
Springfield, VA 22161
phone: 800.553.6847
fax: 703.605.6900
email: orders@ntis.fedworld.gov
online ordering: http://www.ntis.gov/help/ordermethods.aspx

Cover Photos: (left to right) photo by Pat Corkery, NREL 16416, photo from SunEdison, NREL 17423, photo by Pat Corkery, NREL 16560, photo by Dennis Schroeder, NREL 17613, photo by Dean Armstrong, NREL 17436, photo by Pat Corkery, NREL 17721.

NREL prints on paper that contains recycled content.

Acknowledgments

This research was supported by the U.S. Department of Energy under contract number DE-AC36-08GO28308 at the National Renewable Energy Laboratory and contract number DE-AC05-76RL01830 at the Pacific Northwest National Laboratory. Funding for this work was provided by the DOE Office of Energy Efficiency and Renewable Energy.

Executive Summary

This report is an addendum to *SAND2013-9040: Methodology for Design and Economic Analysis of Marine Energy Conversion (MEC) Technologies*. This report describes an oscillating surge wave energy converter (OSWEC) reference model design and complements Reference Models 1–4 in the above report.

A conceptual design for a taut, moored OSWEC was developed. The design had an annual electrical power of 108 kilowatts (kW), rated power of 360 kW, and intended deployment at water depths between 50 m and 100 m. The study includes structural analysis, power output estimation, a hydraulic power conversion chain system, and mooring designs. The results were used to estimate device capital cost and annual operation and maintenance costs. The device performance and costs were used for the economic analysis, following the methodology presented in SAND2013-9040 that included costs for designing, manufacturing, deploying, and operating commercial-scale MEC arrays up to 100 devices. The levelized cost of energy estimated for the Reference Model 5 OSWEC, presented in this report, was for a single device and arrays of 10, 50, and 100 units, and it enabled the economic analysis to account for cost reductions associated with economies of scale. The baseline commercial levelized cost of energy estimate for the Reference Model 5 device in an array comprised of 10 units is $1.44/kilowatt-hour (kWh), and the value drops to approximately $0.69/kWh for an array of 100 units.

Table of Contents

List of Figures

List of Tables

1 Reference Model 5 Description

Reference Model 5 (RM5) is a type of floating, oscillating surge wave energy converter (OSWEC) that utilizes the surge motion of waves to generate electrical power. Several OSWEC designs have been proposed by the wave energy technology industry, including Oyster, EB-Frond, WaveRoller, Resolute Marine, and Langlee. Because of the potential issues surrounding permitting and regulation at near-shore shallow water regions (Copping et al. 2014), combined with the superior wave resources at deep-water sites (Babarit et al. 2012), this study (conducted by researchers from the National Renewable Energy Laboratory [NREL] and the Pacific Northwest National Laboratory [PNNL]) focused on deep-water (50 meter [m]–100 m) surge designs, in which the devices were moored to the seabed. Figure 1 shows the orientation and dimensions of the RM5 OSWEC design. The flap was designed to rotate against the supporting frame to convert wave energy into electrical power from the relative rotational motion induced by incoming waves.

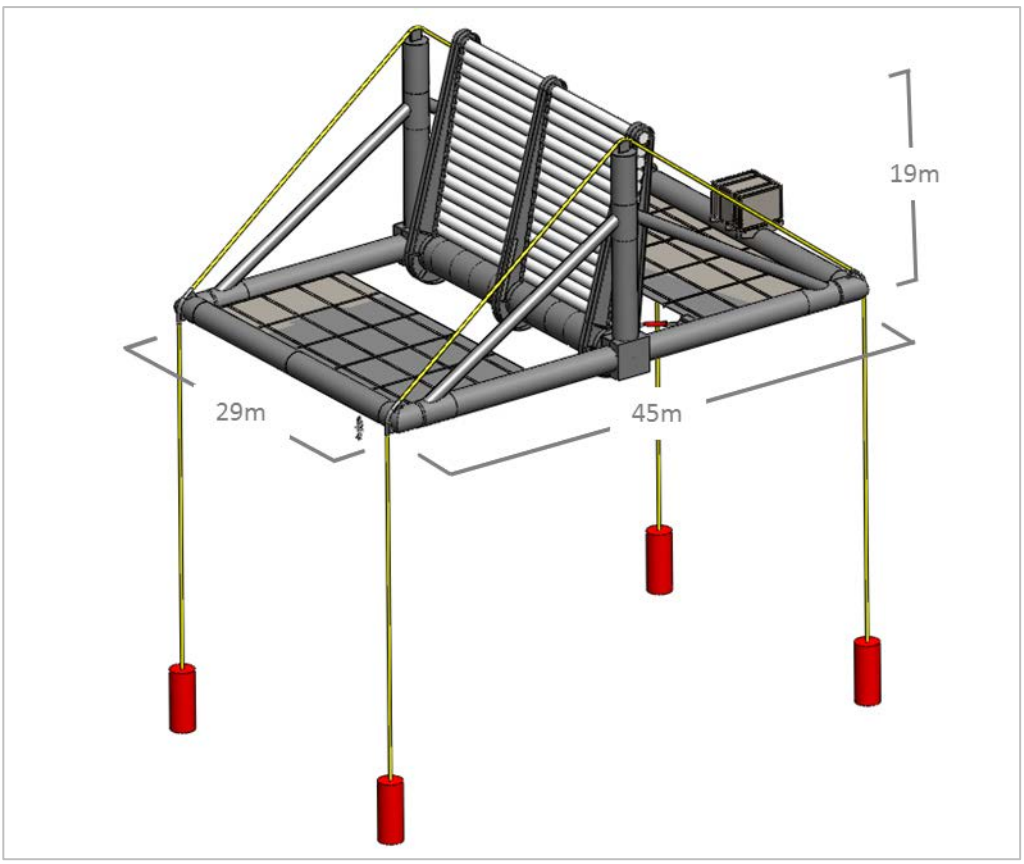

Figure 1. RM5 oscillating surge wave energy converter design

The RM5 design is rated at 360 kilowatts (kW), uses a flap of 25 m in width and 19 m in height (16 m in draft), and the distance from the top of the water surface piercing flap to the mean water surface (freeboard) is 1.5 m. The flap is connected to a shaft with a 3-m diameter that rotates against the supporting frame. The supporting frame is assumed to have an outer diameter of 2 m, and the total length of the device structure is 45 m. In addition, we found it effective to attach bottom plates to the frame, because the increased mass caused by the associated added mass

moment of inertia stabilized the frame, resulting in an improvement of the device's power performance. The RM5 OSWEC was designed for deep-water deployment, at depths between 50 m and 100 m, and was tension-moored to the seabed (Figure 2).

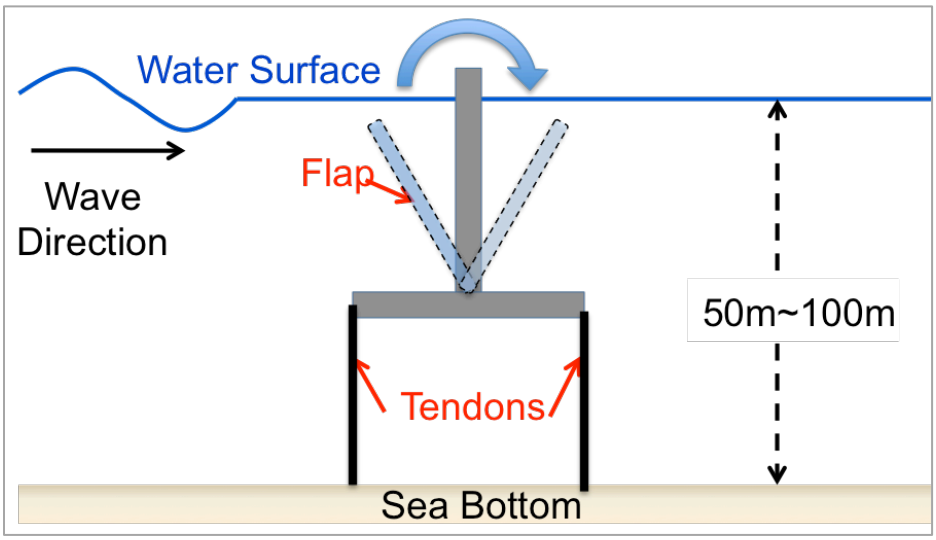

Figure 2. Side view of the RM5 OSWEC design

1.1 Device Design and Analysis

The first step in the device design and analysis process was to develop a conceptual design for a wave energy converter (WEC) device appropriate for the modeled reference resource site. Once the concept design was completed, detailed device design, performance analysis, and structure analysis were performed to estimate the levelized cost of energy (LCOE). The annual energy production (AEP) of the RM5 design was determined based on the characteristics of the wave resource statistic data from the reference site and the power matrix of the device that gave the estimated power prediction of the device for a range of sea states. Extreme loads were estimated using a finite-element analysis (FEA) model based on the pressure distribution under large operational conditions and the 100-year extreme sea state at the reference site.

1.2 Array (Plant) Design and Analysis

As described in the General Methodology section in the previous reference model report (Neary et al. 2014), detailed array design and analysis was not included, thus increasing the uncertainty in the array AEP estimates. In the RM5 OSWEC analysis, we assumed:

- A maximum of 100 units could be deployed at the reference site to take advantage of reduced costs through economies of scale, thus lowering the LCOE estimates.
- The required spacing between the devices to accommodate moorings and avoid ocean vehicle traffic collisions was 600 m (more than 20 times of the flap width), as shown in Figure 3.

The bathymetry and the installation space availability at the deployment site were considered when planning the array layout. The chosen spacing also minimized the fluid dynamic

interaction between devices, ensuring that the loss of energy from the array interaction would be negligible (Babarit et al. 2012).

The total capacity of a 100-unit array is approximately 36 megawatts (MW). Similar to the Reference Model 3 point absorber project, as described in the previous reference model report (Neary et al. 2014), the array layout in the RM5 OSWEC project assumed to have the following characteristics:

- A three-phase AC transmission cable with a voltage level of 30 kilovolts (kV) was selected for the main cable (cable to shore)
- All transmission cables included fiber optic lines to allow communication from each device to shore
- Groups of 10 devices (Figure 3) were connected with interconnection cables that ran between individual units (Figure 4), and the electricity was transmitted to a junction box via a riser cable; a trunk cable connected the junction boxes
- Cable landing was accomplished by directionally drilling a conduit that connected the cable to the first row of devices; this approach minimized installation and maintenance costs.

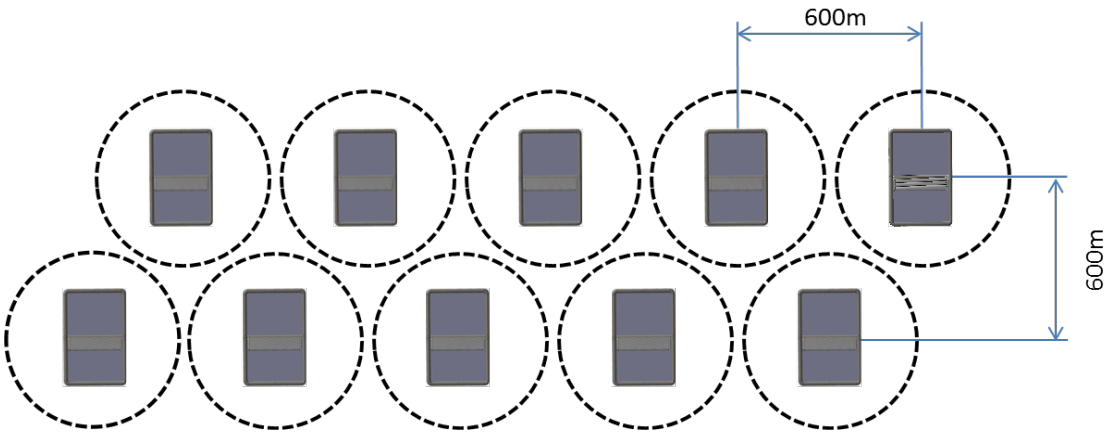

Figure 3. Planned array layout
(Note that the WEC devices are not drawn to scale)

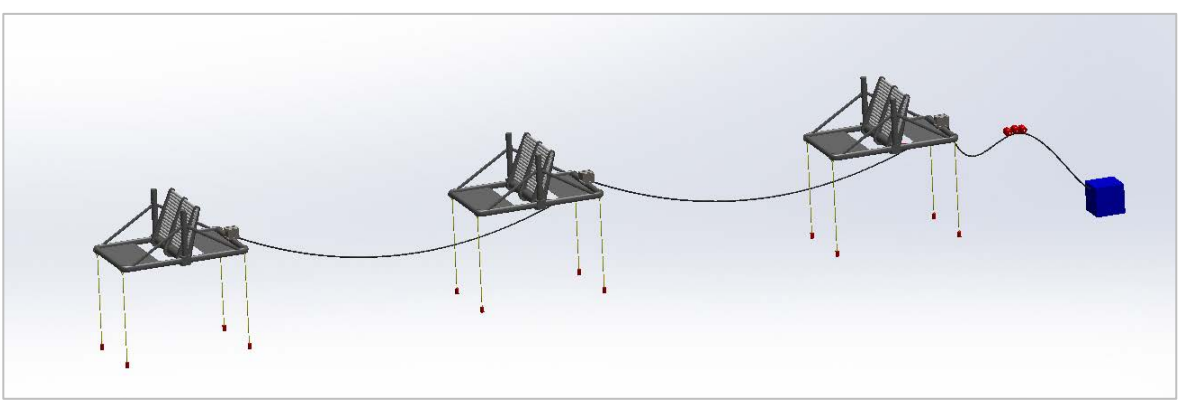

Figure 4. Device interconnection cable, riser cable, and junction box

2 Module Inputs

2.1 Site Information

The reference wave energy resource for RM5 was measurement data from a National Data Buoy Center (NDBC) buoy near Eureka, in Humboldt County, California. This reference site has a wave climate representative of the West Coast of the United States, with a spectrally computed annual averaged wave density of about 30 kilowatts per meter (kW/m) (Dallman and Neary 2014). Of note, Pacific Gas and Electric Company selected the Humboldt site as one of the proposed locations in their WaveConnect Project after studying the possible wave energy potential, grid interconnection, and other infrastructure along the coast of California (Dooher et al. 2011).

2.1.1 Bathymetry and Bed Sediments

The reference site location for the RM5 OSWEC is the same as that of the RM3 point absorber. Figure 5 shows the bathymetry plan, as well as the reference site grid interconnection options.

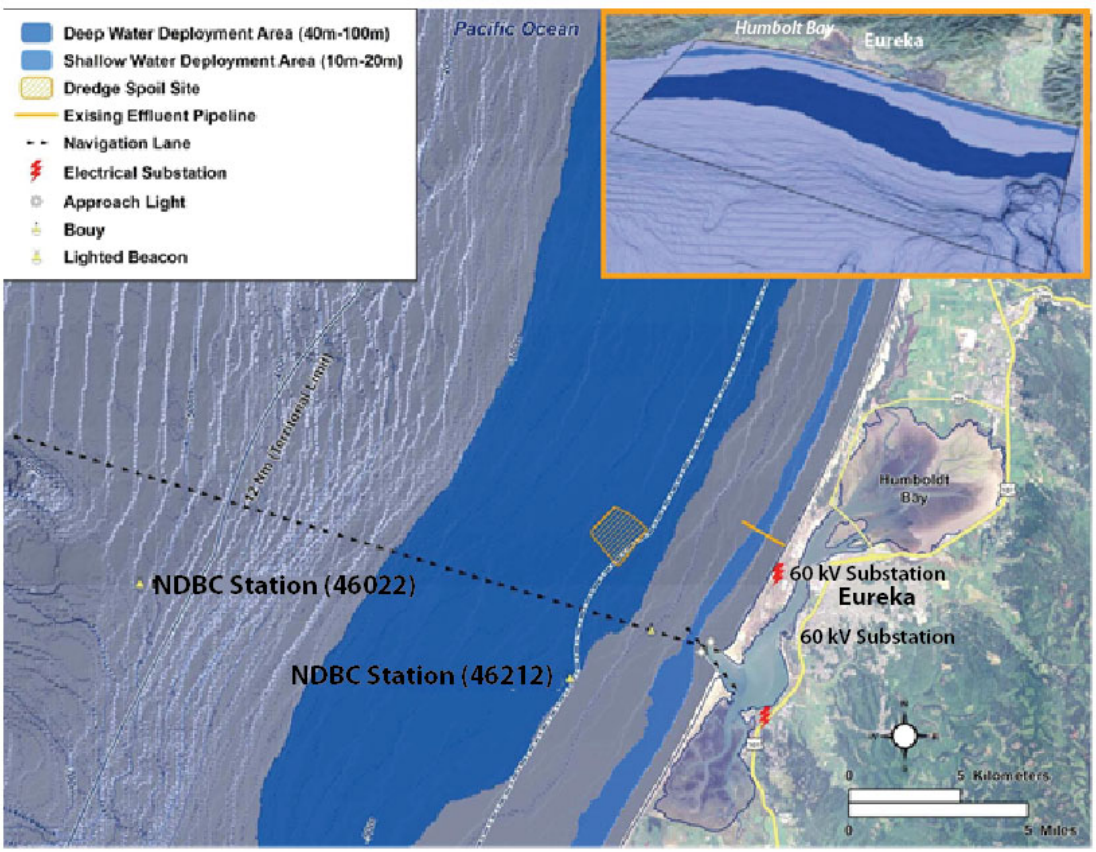

Figure 5. Local site bathymetry plan and reference site grid interconnection options
Source: Neary et al. 2014

As mentioned in a previous reference model report (Neary et al. 2014):

- The deployment site has a gently sloping seabed, free of irregularities that could disturb the local wave field. Thus, it is likely that the wave field is homogeneous over the deployment area of interest.
- Sediment classification enabled a detailed seabed characterization at the reference site, which is a sedimentary shelf throughout the deep-water deployment zone. This characterization also helped assess the impacts that the RM5 device and array would have on the marine environment and ecosystem.
- Most of the seabed in the near-shore proposed cable route and deployment area in the region of the Humboldt site consists of soft sediments (sand and clay) that are well-suited for subsea cable burial and anchoring.

2.1.2 Operational Wave Characteristics

The behavior of irregular waves at a reference site may be provided in terms of a joint probability distribution (JPD) of possible binned sea states, with each characterized by significant wave height H_s and peak period T_p (or energy period T_e). The wave resource statistic data was measured from the NDBC buoy (#46212) near Humboldt Bay, California, from 2004 to 2012 (Dallman and Neary 2014). Because the Humboldt site climate has a relative stable wave direction for operational waves, the analysis presented in the study assumed unidirectional waves, and incident wave direction perpendicular to the RM5 OSWEC's flap surface. Only the significant wave height and peak period were used to characterize the wave resource in this study. The percentage occurrence of each binned sea state at the reference site is shown in Table 1. Inside the red zone are the sea states in which the OSWEC is assumed to be operational and generating power.

Table 1. Percentage Occurrence of Sea States at Humboldt Bay, California (NDBC #46212)

		Energy Period, Te [sec]																	
		3.5	4.5	5.5	6.5	7.5	8.5	9.5	10.5	11.5	12.5	13.5	14.5	15.5	16.5	17.5	18.5	19.5	20.5
Significant Wave Height, Hs [m]	0.25					0.02	0.03												
	0.75		0.02	0.46	1.49	2.68	1.91	1.10	0.53	0.17	0.02								
	1.25		0.01	0.59	4.11	5.56	4.48	2.74	1.28	0.67	0.33	0.07	0.02	0.02					
	1.75			0.12	3.27	5.14	4.62	3.93	2.11	1.24	0.76	0.31	0.10	0.03					
	2.25				0.92	5.25	3.68	4.14	2.87	1.31	0.84	0.42	0.20	0.08	0.02				
	2.75				0.14	2.43	2.60	2.82	2.85	1.57	0.80	0.32	0.14	0.06	0.02				
	3.25					0.45	1.54	1.47	1.96	1.42	0.79	0.32	0.11	0.04	0.02	0.01	0.01		
	3.75					0.05	0.49	0.63	1.08	1.01	0.63	0.29	0.10	0.05	0.02				
	4.25						0.09	0.21	0.45	0.56	0.42	0.21	0.07	0.02	0.02				
	4.75						0.02	0.08	0.12	0.26	0.27	0.19	0.07	0.02	0.01				
	5.25							0.03	0.03	0.11	0.15	0.13	0.07	0.02					
	5.75									0.02	0.07	0.05	0.05	0.02					
	6.25										0.03	0.04	0.02	0.01					
	6.75											0.02	0.02						
	7.25																		
	7.75																		
	8.25																		
	8.75																		
		4.1	5.2	6.4	7.5	8.7	9.9	11.0	12.2	13.3	14.5	15.7	16.8	18.0	19.1	20.3	21.5	22.6	23.8
		Peak Period, Tp [sec]																	

According to linear wave theory, the wave energy flux for irregular waves in deep water is

$$J_s = \frac{\rho g^2}{64\pi} H_s^2 T_e$$

where J_s is the wave energy flux per unit of wave-crest length for irregular waves, ρ is the water density, and g is the acceleration of gravity. Using the equation above and JPD calculations, the percentage of total incident energy at the reference site was determined. The incident energy for each binned sea state is shown in Table 2. Note that occurrences or contributions to annual power of less than 0.01% are not shown in the two tables.

Table 2. Percentage of Total Energy of Sea States at Humboldt Bay, California

		Energy Period, Te [sec]																	
		3.5	4.5	5.5	6.5	7.5	8.5	9.5	10.5	11.5	12.5	13.5	14.5	15.5	16.5	17.5	18.5	19.5	20.5
Significant Wave Height, Hs [m]	0.25																		
	0.75			0.03	0.12	0.24	0.19	0.13	0.07	0.03									
	1.25			0.08	0.75	1.15	1.09	0.78	0.40	0.24	0.13	0.03							
	1.75			0.03	1.08	2.09	2.16	2.14	1.29	0.82	0.55	0.25	0.08	0.02					
	2.25				0.51	3.43	2.82	3.65	2.84	1.43	0.98	0.53	0.26	0.11	0.03				
	2.75				0.11	2.33	2.95	3.68	4.17	2.53	1.40	0.59	0.28	0.12	0.04	0.01			
	3.25					0.60	2.43	2.66	4.02	3.19	1.93	0.82	0.30	0.12	0.06	0.04	0.03		
	3.75					0.09	1.03	1.53	2.93	3.02	2.04	1.02	0.37	0.18	0.07	0.02	0.03	0.02	
	4.25					0.02	0.26	0.64	1.55	2.14	1.74	0.96	0.32	0.11	0.10	0.01	0.01		
	4.75						0.07	0.32	0.53	1.28	1.40	1.05	0.42	0.15	0.07	0.05			
	5.25							0.13	0.14	0.62	0.96	0.89	0.51	0.16	0.06	0.02	0.01		
	5.75							0.02	0.02	0.15	0.57	0.44	0.40	0.17	0.01				
	6.25									0.06	0.30	0.39	0.21	0.13	0.02				
	6.75								0.01	0.06	0.04	0.23	0.22	0.12		0.02	0.02		
	7.25											0.07	0.03		0.02				
	7.75									0.02		0.02	0.02						
	8.25										0.02	0.02	0.07						
	8.75												0.03						
		4.1	5.2	6.4	7.5	8.7	9.9	11.0	12.2	13.3	14.5	15.7	16.8	18.0	19.1	20.3	21.5	22.6	23.8
		Peak Period, Tp [sec]																	

2.1.3 Extreme Sea States

Based on NDBC data gathered off the West Coast of the United States, a typical 100-year significant wave height during storms is generally between 8 m and 13 m (Mackay et al. 2010). Data from the NDBC #46212 buoy (Dallman and Neary 2014) also contained specific extreme wave conditions during storms near the Humboldt site (station #46212). Figure 6 shows the scatterplot of measured conditions at NDBC #46212 from 2004 to 2012. Also shown are the 100-year contour and a 20% inflated contour, accounting for the approximations in the extreme load simulations. Table 3 shows the selected wave environments on the 20% inflated contour (open circles in Figure 6), which were considered for design load analysis and device structure design (described in Section 3.1.1).

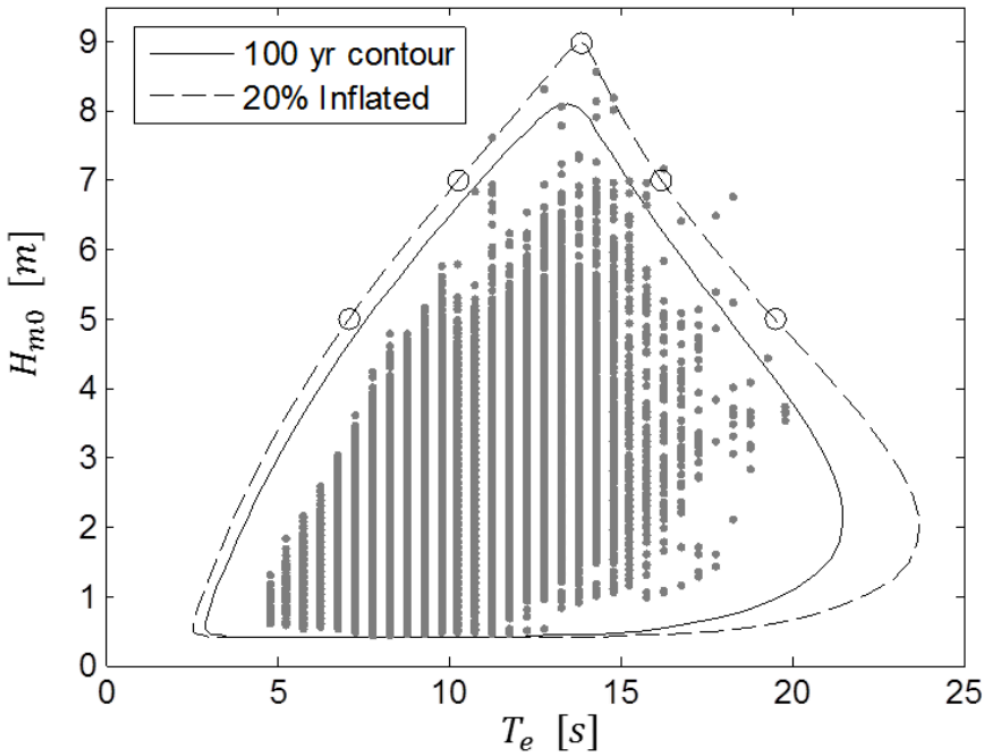

Figure 6. 100-year contour for NDBC buoy #46212
Source: Dallman and Neary 2014

Table 3. Wave Environments Along the 20% Inflated 100-Year Contour

	Significant Wave Height H_s (m)	Energy Period T_e (s)
1	5.0	7.1
2	7.0	10.3
3	9.0	13.8
4	7.0	16.2
5	5.0	19.5

2.1.4 Adjacent Port Facilities and Grid Options

Figure 7 shows a nautical chart of the Humboldt Bay area from the National Oceanic and Atmospheric Administration (NOAA). As described in the previous reference model report (Neary et al. 2014), the advantages of port facilities and grid options include the following:

- The Humboldt Bay port is the only deep-water port on California's north coast. Humboldt's facilities are well-suited for installation and operational activities that would be required if a WEC plant was deployed.

- Multiple piers within the bay would greatly facilitate the launching of any WEC installation project and provide some of the necessary infrastructure for operational activities.
- A 60-kV substation is located approximately 5 miles north of the Humboldt Bay inlet, which can easily serve as the interconnection point to the local electrical grid.

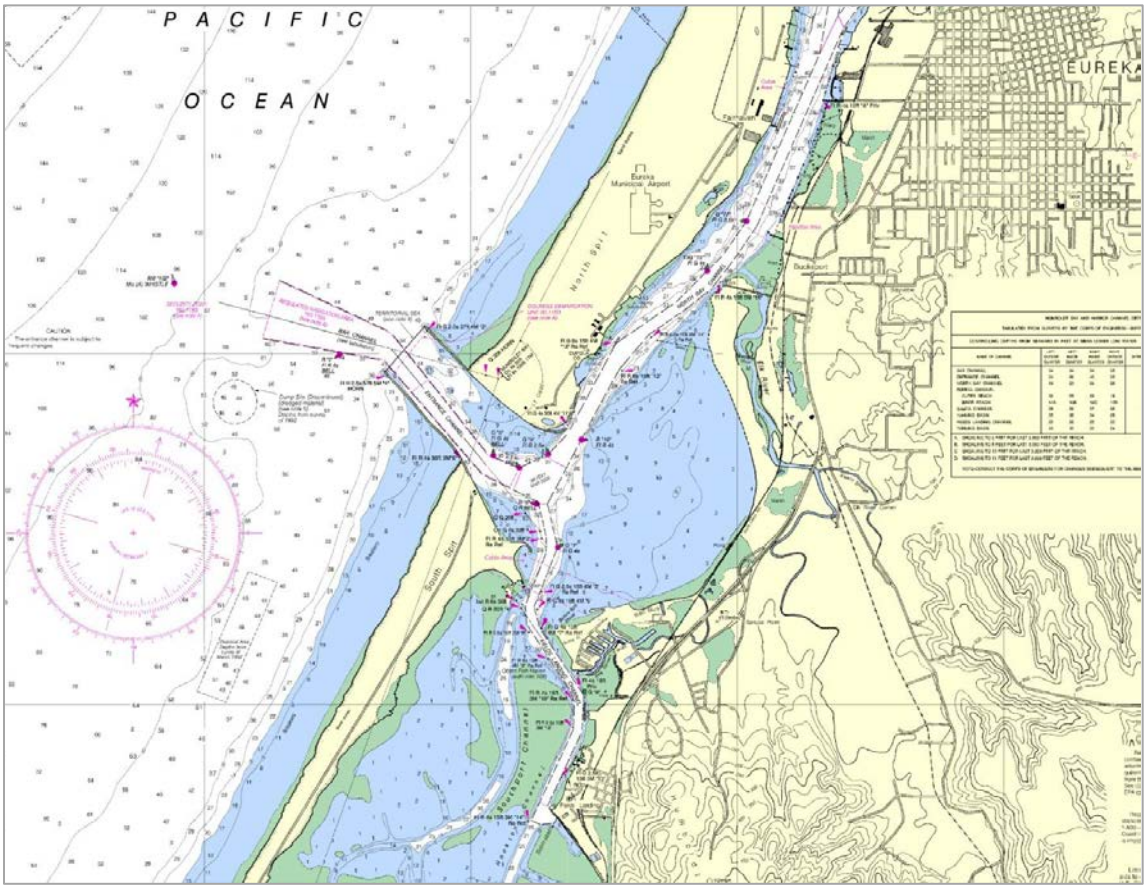

Figure 7. NOAA nautical chart of Humboldt Bay, California
Source: Neary et al. 2014

2.2 Device/Array Information

As summarized in Table 4, we determined the conceptual design specifications based on siting constraints, device structural calculations, and other considerations. More details are described in Section 2.

Table 4. RM5 Design Specifications

Category & Description		Specification	Justification	Details
Environment	Water depth	50 m–100 m (modeled at 70 m)	Site resource characteristics	Sufficient depth for deep-water WEC design
	Operational sea states	T_e=5 sec~18 sec; H_s=0.75 m~6 m	Site resource characteristics	Based on the wave statistic data at the reference site
	Wave energy density (flux)	30 kW/m	Site resource characteristics	Spectrally computed
	Directionality	Unidirectional	Engineering judgment	Assuming unidirectional seas in power performance calculations
Device	WEC type	Terminator	WEC architecture	Floating oscillating surge WEC
	Structure	Fiberglass and steel	FEA	Designed for wave loads under extreme sea states (locked flap at 45 degrees) and large operational waves (5 m)
	Mooring	Taut mooring (four legs and two lines per leg)	Power performance improvement	Designed for mooring loads under extreme 20% inflated 100-year return period sea states
	Power conversion chain	Hydraulic	Engineering judgment	Two dual-acting hydraulic cylinders with energy storage
Performance	Annual averaged electrical power	108 kW	Numerical modeling and literature	Used WEC-Sim to calculate the mechanical power matrix and assumed 82.5% power conversion chain efficiency (Neary et al. 2014)
	Rated power	360 kW	Literature	30% capacity factor (Previsic et al. 2012; RenewableUK 2010)
	Annual energy production	882 megawatt-hours	Engineering judgment	98% transmission efficiency; 95% device availability (Neary et al. 2014)
Deployment	Array configuration	Staggered with a separation larger than 20 times of device width	Literature and engineering judgment	Avoid device interaction (Babarit et al. 2012)

3 Device Design, Performance, and Analysis

WEC devices must be designed to withstand extreme sea states during severe storms. To this end, the RM5 team used iterative processes including structure analysis and design performance simulations. We first used power-to-displacement-volume ratio calculations to select three potential OSWEC design dimensions for further analysis. We then simulated the three designs using WEC-Sim to estimate the design power output at the reference site, and compared the power-to-characteristic mass ratios (Yu et al. 2014). Based on those studies, design simplicity, and engineering judgment, a taut mooring OSWEC design was selected for further LCOE estimation. This section presents the structural design and stress analysis for the RM5 OSWEC and the design power performance estimation, as well as discusses potential improvements to enhance power output and reduce LCOE.

3.1 Design and Analysis Module

3.1.1 Materials Specifications and Structural Analysis

This section presents a preliminary structural analysis for determining the mass properties of the designed OSWEC components. As shown in Figure 1, the RM5 design contained a flap and a supporting frame that was made of steel tubes. The flap was assumed to be made of fiberglass tubes with steel ribs and connected to a steel rotational shaft.

Figure 8. RM5 surge flap design

The RM5 surge flap design utilizes steel and fiberglass to reduce costs, both capital and maintenance, while maintaining a desirable safety factor, as discussed further below. The flap structure is comprised of three steel upright sections with tapered profiles. The upright structures are attached to an additional steel shaft with a diameter of 3 m. The shaft is attached to the pivot point on the RM5 frame. The steel structure is designed to resist the bending moment that occurs

during operation. Because the horizontal tubes do not experience the same magnitude of stress as the supporting frame, they do not require steel components. Instead, we installed fiberglass tubes horizontally in the upright sections to create the surface area required to capture wave energy. Using fiberglass reduces both mass and corrosion-associated maintenance. Figure 8 is a representation of the assembled surge flap.

The RM5 frame consists primarily of 2-m-diameter rolled steel tubing. The frame is designed to allow for a pivot location for a single flap, mounting locations for mooring, and to minimize movement of the frame relative to the seabed. The footprint is approximately 45 m by 28 m. Figure 9 is a representation of the RM5 frame.

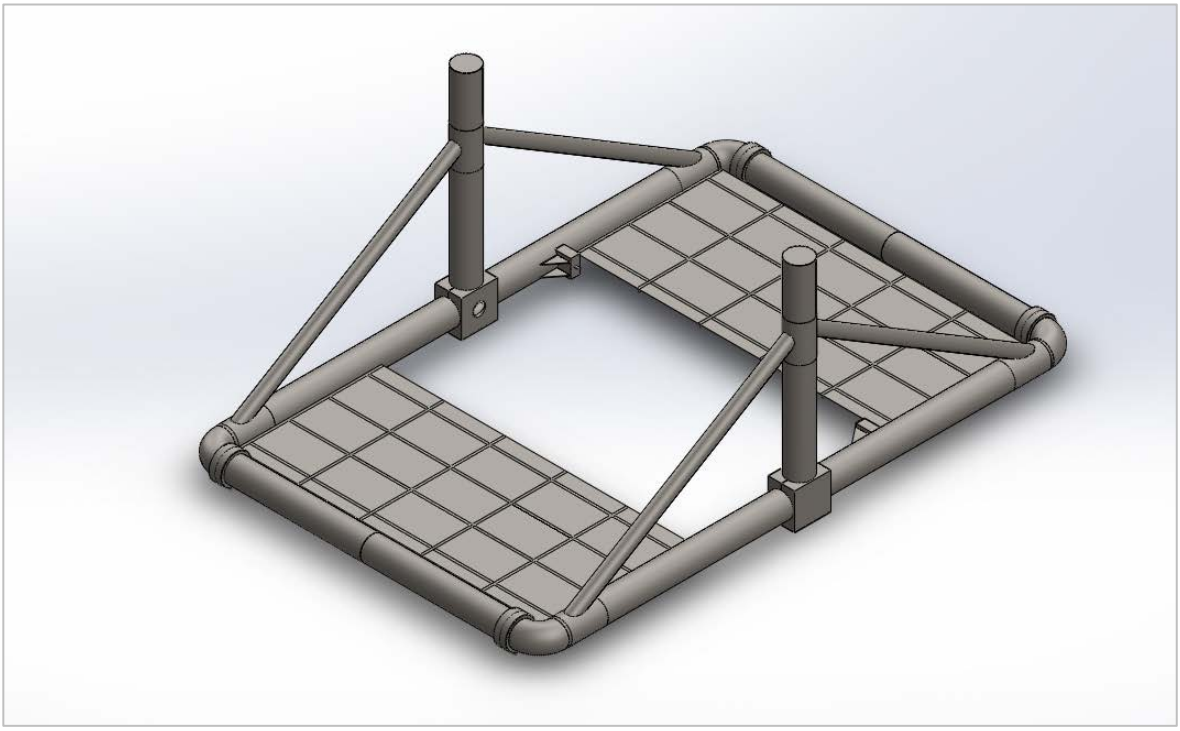

Figure 9. RM5 frame design

When a WEC is deployed, all structural components are subject to not only the stress from hydrostatic pressure, but also stress from the force of waves passing over the device. To analyze these forces further, we evaluated two scenarios. The first focused on extreme sea states, and the second focused on large operational wave conditions. For extreme sea states, we assumed the RM5 design was not operating, that the flap was locked at 45 degrees, and that the structure was subject to 20% inflated 100-year extreme waves. For large operational wave conditions, we evaluated the pressure distribution for a flap at its mean position and subject to the operational sea states that gave the largest force. The structural calculations were performed using the pressure distribution data from WAMIT, and an example of the pressure distribution when the flap is at its mean position is plotted in Figure 10.

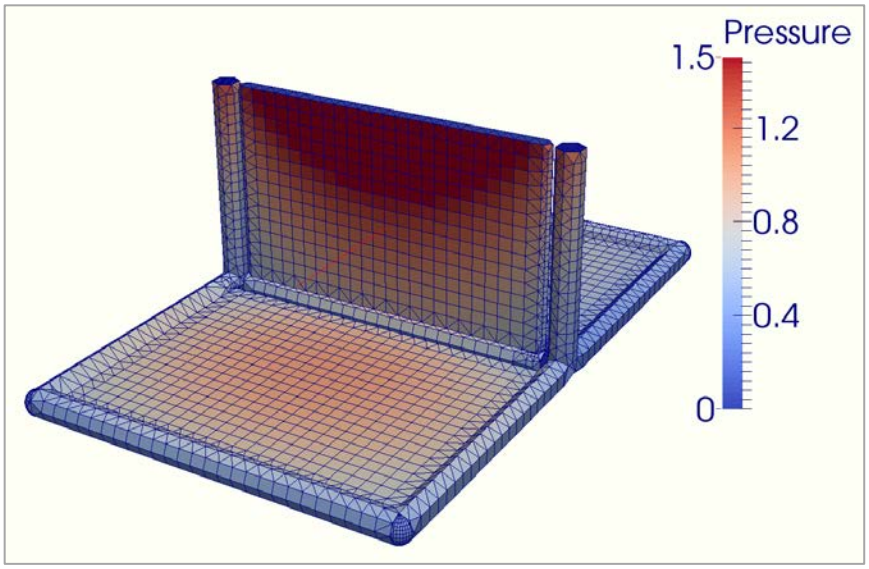

Figure 10. An example of pressure distribution (scaled by *water density, gravity, and wave amplitude*) from WAMIT (T=7 sec) when the flap is at its mean position

The stress analysis for the flap and frame was performed using static FEA in SolidWorks. To reduce the number of elements, while still allowing for convergence, a curvature based mesh was used. This allows a nonuniform element size to be used in complex regions, such as where two components join. Even with a curvature-based mesh, the relatively small material thickness—in relation to the WEC size—requires a large number of mesh elements. The frame's mesh has approximately 520,000 elements and the flap mesh has approximately 675,000 elements.

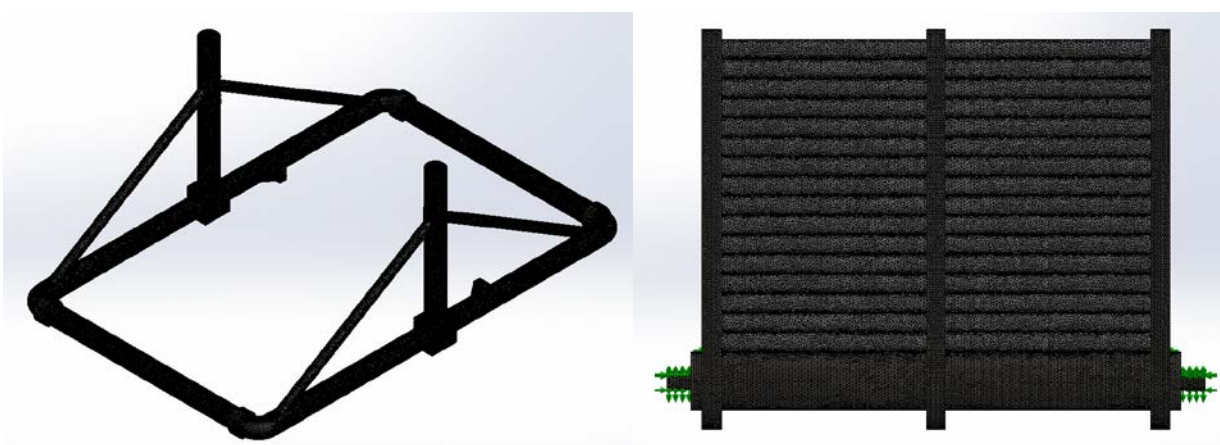

Figure 11. Representation of mesh used for the FEA analysis of the RM5 flap and frame

The FEA takes account for the nonlinear wave pressure distribution seen on both sides of the flap and frame, as well as a linear approximation of the hydrostatic pressure. The flap model was fixed using fixed-hinge connections at both the flap pivot locations, and the flap-hydraulic power conversion chain (PCC). The frame model was also fixed using fixed-hinge connections, but at the mooring pivot locations at each corner of the frame. A minimum Factor of Safety (FOS) of 1.5 was assumed for all structural components. Figure 12 shows the FOS plot for the RM5 flap and Figure 13 shows the FOS plot for the frame, both of which scale FOS from 1 to 5. The final mass and Moment Of Inertia (MOI) for the design are given in Table 5.

Table 5. List of Design Mass Properties

	Fiberglass Mass (Tonnes)	Steel Mass (Tonnes)	Center of Gravity (m)	MOI at Center of Gravity (Tonnes-m^2)		
				17,328	0	0
Flap	72	428	[0, 0, -11.4]	0	56,248	2.93
				0	2.93	40,156
				67,105	0	0
Frame	None	300	[0, 0, -14.1]	0	45,404	51.4
				0	51.4	103,249

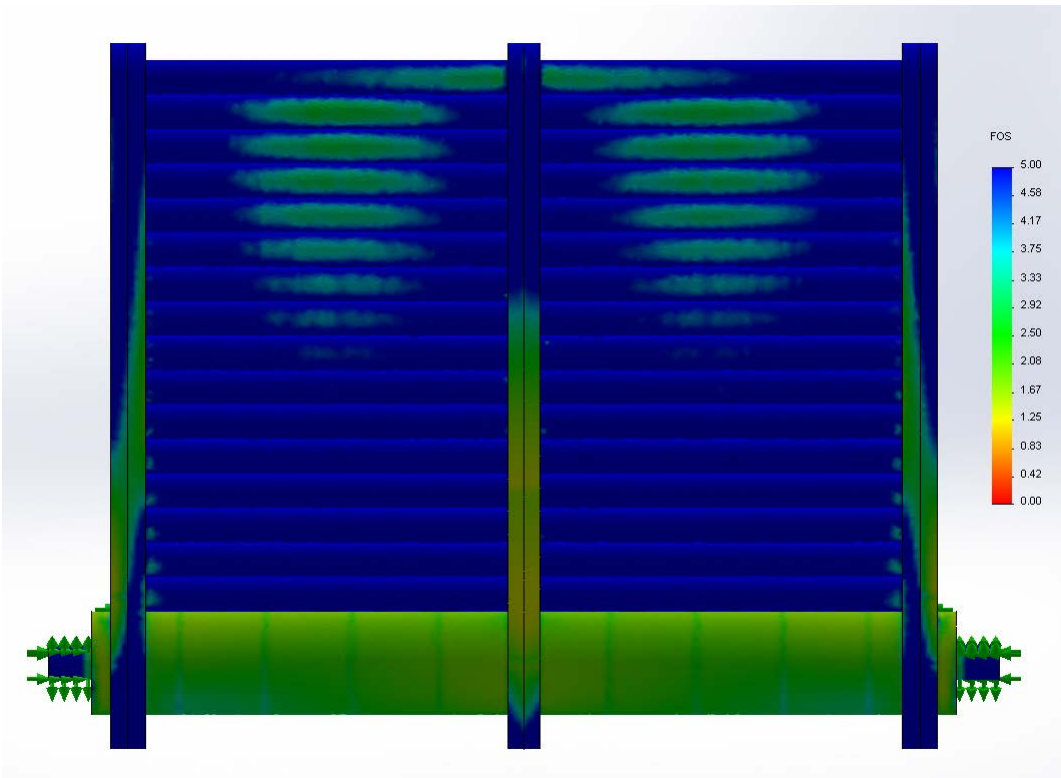

Figure 12. FOS plot for the RM5 flap

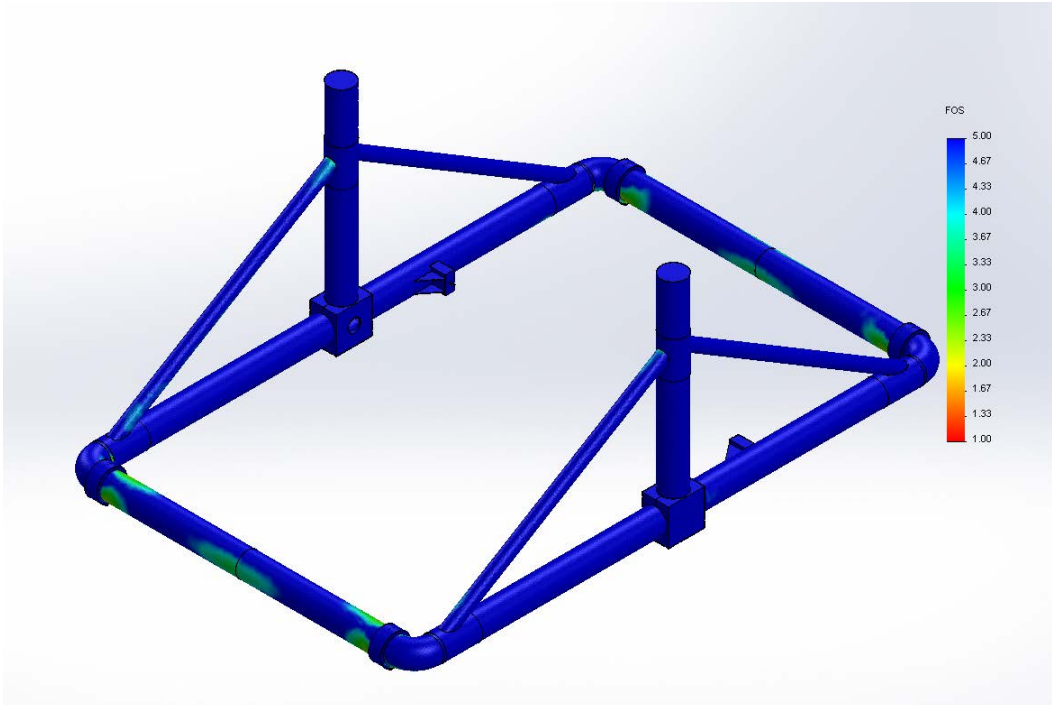

Figure 13. FOS plot for the RM5 frame

3.1.2 Performance Analysis and AEP Estimation

Numerical Model

A time-domain numerical model, WEC-Sim, was applied to simulate the hydrodynamics of the RM5 OSWEC to estimate its power performance under operational wave conditions. The numerical model solves the Cummins' equation (Cummins 1962):

$$(m + m_\infty)\ddot{x} = -\int_{-\infty}^{t} K(t-\tau)\dot{x}(\tau)d\tau - F_{hs} + F_e + F_v + F_{ext}$$

where m is the mass matrix and m_∞ is the added mass matrix at infinite frequency. The term $-\int_{-\infty}^{t} K(t-\tau)\dot{x}(\tau)d\tau$ is the convolution integral that represents the resistive damping force on the body from wave radiation. K is the impulse response function. F_{hs}, F_e, F_v, and F_{ext} are the hydrostatic restoring force, the wave excitation force, the viscous drag force, and the external forces, respectively.

As shown in Figure 14, the model for the RM5 OSWEC was set up in WEC-Sim by connecting the flap to the frame with a defined linear damping coefficient that simulates the PCC system, and connecting the frame to the seabed using a 3 degree-of-freedom (DOF) floating joint connection, which was used to model a floating WEC device and allowed the body to move freely in heave, surge, and pitch.

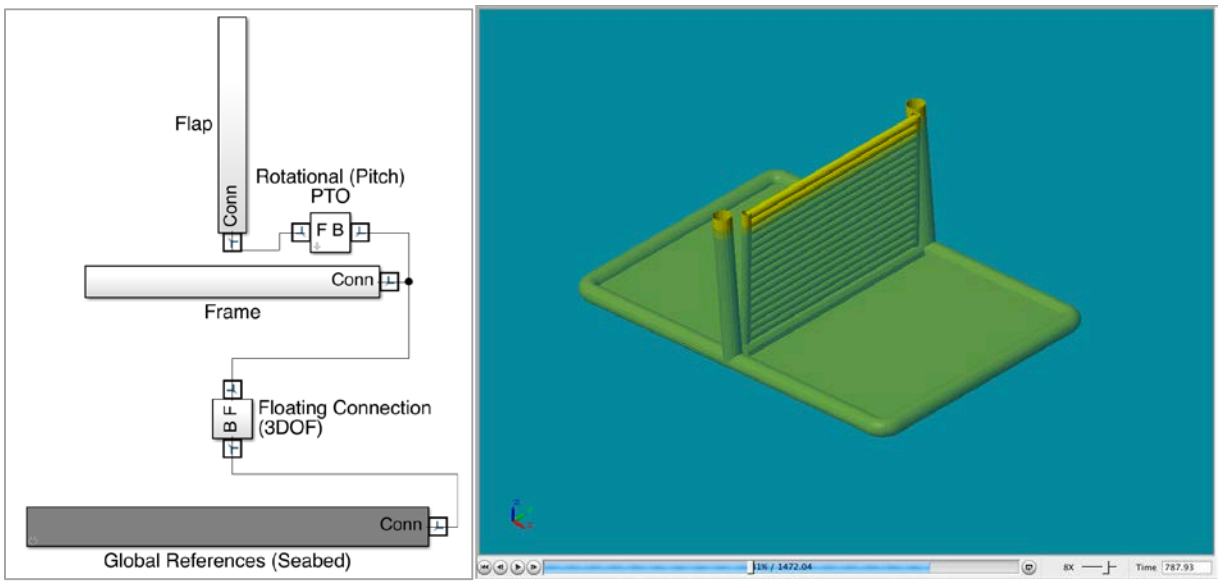

Figure 14. Model setup in WEC-Sim

The simulation was performed for a range of irregular sea states, each with characteristic H_s and T_p and each represented using a Brechtschneider spectrum. The hydrodynamic response of the device was simulated in the time domain for a duration of 125 T_p with a ramp time of 25 T_p and a maximum time step size of 0.01 T_p. Note that the mooring lines were modeled using a linear quasi-static mooring stiffness. For simplicity, the weight of the mooring line was not considered in the simulations. The pretension was equal to the total net buoyancy force from the flap and shaft and the frame. For the simulations, an optimal mooring stiffness was selected based on the device power performance for a typical sea state (T_e = 8.7 sec; Hs = 1.75 m) from the reference site. An optimal velocity-dependent PCC damping force for each sea state was determined by adjusting the PCC damping coefficient and selecting the value with the best device power performance.

Power Matrix and Estimated AEP Calculation

The annual energy production (AEP) for a WEC can be determined from the wave statistics at a reference site, the device performance power matrix, and the loss between absorbed hydrodynamic power and electrical power output. As discussed earlier, the wave statistics at the reference site are often represented by the JPD of the waves, characterized by H_s and T_e (or T_p). The JPD at Humboldt Bay, California, (Table 1) was used in the study.

The power generation performance of WECs in irregular seas is often represented using a power matrix, which we obtained by modeling the RM5 OSWEC at each given binned sea state and then calculating the averaged power performance. To estimate the electrical power matrix, we multiplied the mechanical power matrix with a PCC conversion efficiency and limited the maximum electrical power output at the rated power. The electrical power that can be generated by the OSWEC design under each given sea state can be obtained from

$$P_e = P_m \times \eta_1$$

where P_m and P_e are the estimated mechanical and electrical power at each binned sea state, and η_1 is the PCC efficiency that accounts for the losses between absorbed hydrodynamic power and electrical power output.

We assumed that a hydraulic PCC system with a conversion efficiency of 82.5% was used for the OSWEC designs, which followed the assumption used in RM 3 (Neary et al. 2014). The rated power was estimated based on a capacity factor of 30% (Previsic et al. 2012; RenewableUK 2010). The resulting electrical power matrix for the RM5 design is shown in Table 6.

Table 6. Electrical Power Matrix for the RM5 OSWEC Design

		Energy Period, Te [sec]													
		4.5	**5.5**	**6.5**	**7.5**	**8.5**	**9.5**	**10.5**	**11.5**	**12.5**	**13.5**	**14.5**	**15.5**	**16.5**	**17.5**
Significant Wave Height, Hs [m]	**0.75**	12	17	19	21	23	22	21	19	19	17	16	14	13	12
	1.25	32	41	45	48	52	49	45	42	40	36	35	32	29	27
	1.75	58	72	77	82	87	81	74	70	67	60	58	53	49	45
	2.25	91	110	116	119	127	117	108	102	97	86	83	76	71	65
	2.75	131	155	160	163	172	159	145	138	130	116	110	101	95	87
	3.25	175	204	209	210	221	203	186	176	166	148	140	130	121	110
	3.75	224	259	262	262	272	250	228	215	205	183	173	160	148	135
	4.25	277	317	319	316	327	299	272	257	246	220	207	192	177	162
	4.75	335	360	360	360	360	349	317	302	288	259	243	225	209	190
	5.25	360	360	360	360	360	360	360	349	333	299	280	261	242	220
	5.75	360	360	360	360	360	360	360	360	360	340	319	299	276	251
		5.2	**6.4**	**7.5**	**8.7**	**9.9**	**11.0**	**12.2**	**13.3**	**14.5**	**15.7**	**16.8**	**18.0**	**19.1**	**20.3**
		Peak Period, Tp [sec]													

The annual averaged electrical power P_{ae} was then obtained by summing the product of the electrical power matrix and the JPD for the reference site. Then, the estimated AEP (in megawatt-hours [MWh]) was calculated by

$$AEP = P_{ae} \times 8766 \text{ (hours)} \times \beta$$

where $\beta = \eta_2 \text{x} \eta_3$ is the parameter accounting for the losses caused by transmission efficiency η_3=0.98 (98%) and device availability η_s=0.95 (95%) (Neary et al. 2014).

Table 7. Rated Power and Power Output for the Floating Point Absorber Device Predicted from WEC-Sim

Device Performance	Per Unit
Rated power	360 kW
Annual averaged electrical power	108 kW
AEP	882 MWh

3.1.3 Power Conversion Chain

To characterize the effects of the PCC on LCOE, we established a conceptual design. We chose a hydraulic design because of the oscillating motion inherent to any oscillating surge device. Figure 15 shows the layout of the two hydraulic rams and the PCC enclosure installed on the RM5.

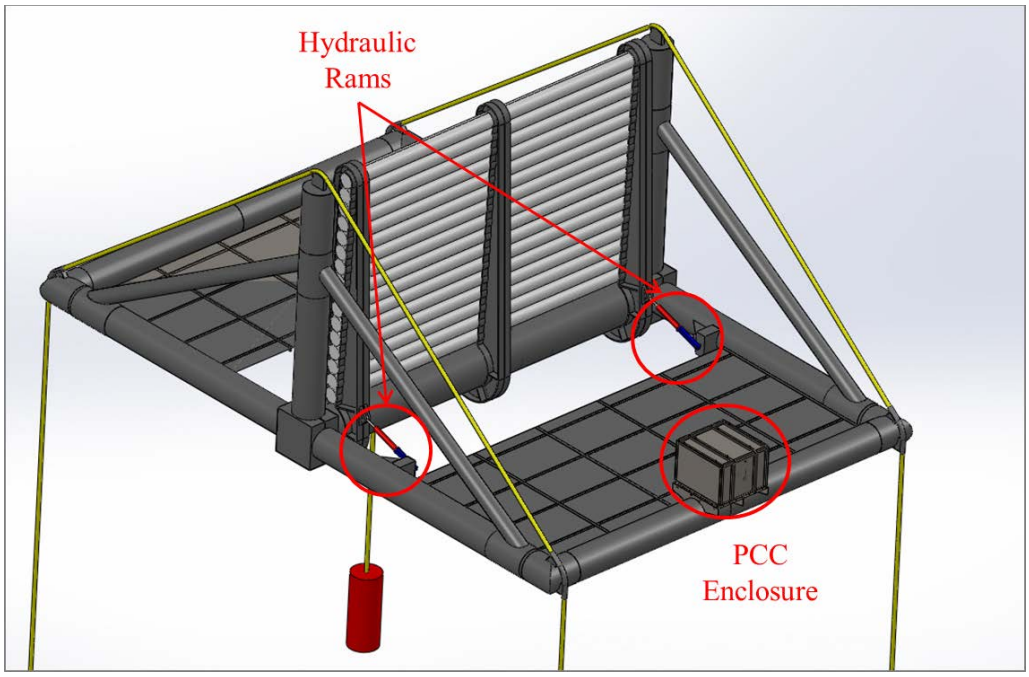

Figure 15. RM5 power conversion chain layout

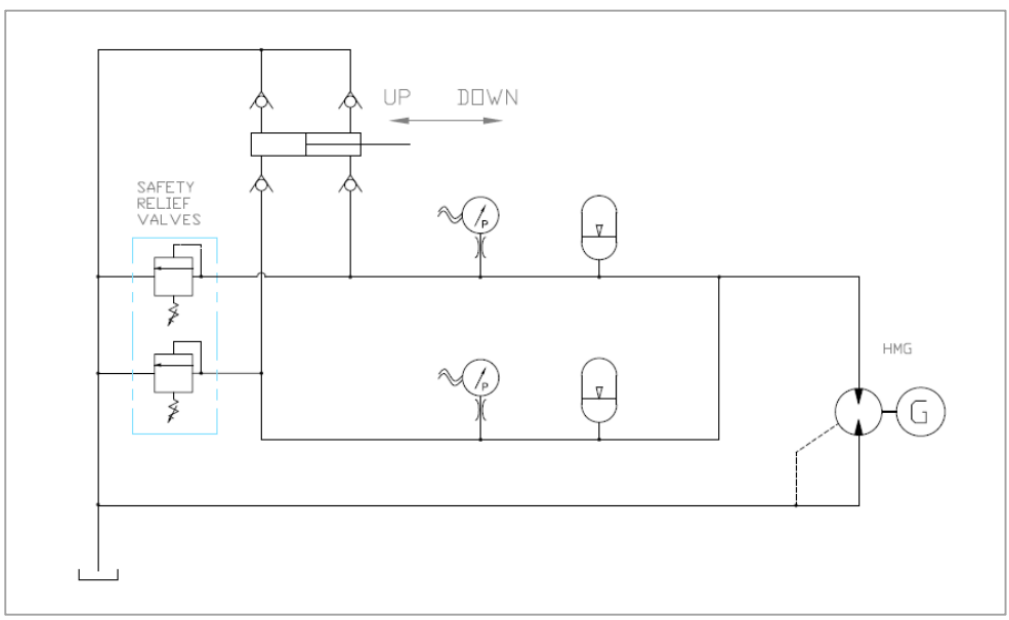

Figure 16. Hydraulic circuit for the RM5 design (Neary et al. 2014)

The general layout of hydraulic components is similar to that of RM3 (Neary et al. 2014), but with an additional hydraulic ram to reduce torsion across the surge plate. Figure 16 shows a schematic of RM5's hydraulic circuit.

The hydraulic circuit consists of two double-acting hydraulic rams that are connected to the surge plate at one end and the frame on the other end. As the surge plate oscillates back and forth, the hydraulic rams extend and compress. The oscillating extension and compression of the cylinder forces the hydraulic fluid through the system, therefore creating pressurized flow. The energy in the hydraulic fluid is then converted into mechanical energy via a hydraulic motor. The pressure and flow through the hydraulic motor create torque and angular velocity that can be converted into electricity via an electric generator. To reduce pressure fluctuations at the hydraulic motor, a set of hydraulic accumulators are used to smooth the peaks associated with the oscillating motion of the rams.

The PCC was designed as a fully enclosed unit that can be lifted out of place for complete device replacement or overhaul; however, the hydraulic rams are separate and would be disconnected prior to PCC removal. Figure 17 shows the PCC with the walls removed to display the layout of components within the assembly.

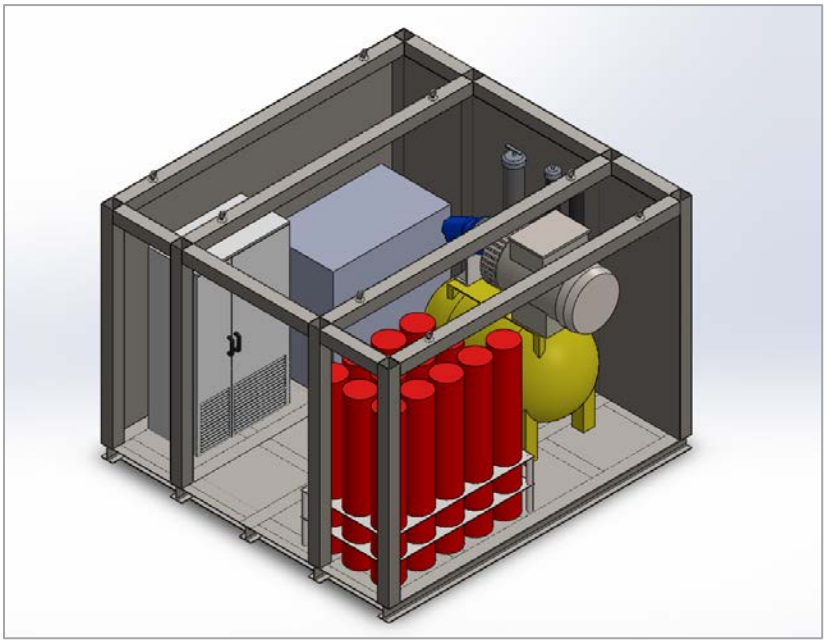

Figure 17. PCC assembly and enclosure (three walls removed)

The PCC components were sized based on the device's rated generator output of 360 kW (482 horsepower. A 373-kW four-pole (1,800 rpm) generator was used for sizing the hydraulic components. To eliminate the need for a gear reduction system, the hydraulic motor was sized to match the generator input. The hydraulic motor is a positive fixed-displacement axial piston type, with a displacement of 500 cc/revolution (0.132 gal/rev). Therefore, operating the hydraulic motor at 1,800 rpm requires an input flow of approximately 240 gallons per minute (gpm). Using the equation below, through the relationship between pressure, flow, and hydraulic power (Lapeyrouse 2002), we can approximate the required system pressure that will create the needed torque. To maintain consistency with RM3, the hydraulic system efficiency of the RM5 PCC was

assumed to be 82% (95% hydraulic ram efficiency and 86.5% hydraulic motor efficiency) (Neary et al. 2014)

$$HP = \frac{P * Q * \eta_1}{1714}$$

where HP is hydraulic power (horsepower), P is hydraulic pressure (PSI), and Q is the flow rate (gpm).

After solving for pressure, we found that the required system pressure is 4,123 PSI, which is within the operating limits of the selected hydraulic motor. It should be noted that even though the system pressure is within the operational limits of the hydraulic motor, high-pressure systems have more inherent design challenges. These difficulties could be mitigated by using a larger displacement hydraulic motor, or by increasing the generator speed. Given the current selection of off-the-shelf hydraulic components, these options were not explored. The hydraulic ram dimensions were designed so that the stroke length is less than 2 m during normal operation (±20°), while still allowing the device to lay down past 45° during an extreme event. The cylinders chosen have a piston diameter of 7.5 in (19 cm) and a shaft diameter of 4.7 in (12 cm). This configuration was designed based on a flow profile of 9-second (s) wave periods and a ±20° flap angle during normal operation.

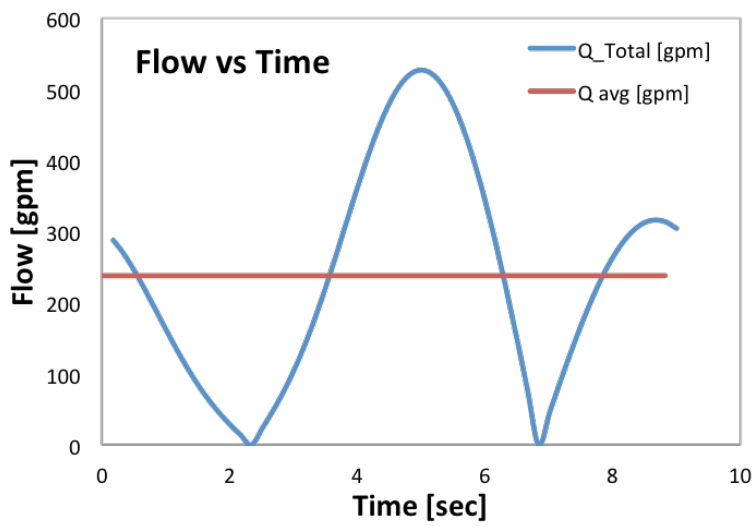

Figure 18. Flow profile of the RM5 power conversion chain

As shown in Figure 18, the flow distribution is not perfectly mirrored, because the hydraulic rams are not centered on the device. This creates a slight variation in piston velocity relative to flap angle; however, it can be seen that during normal operation, the system is exceeding the average flow and is below the average flow in quarter-period increments. To smooth the flow so that the hydraulic motor sees a constant value equal to the average rate, a set of hydraulic accumulators should be utilized. Although there are only 2.25 s of accumulator discharge and 2.25 s of charge under normal operation, our PCC was designed for 20 s of discharge with an allowable pressure drop of 66% (2,721 PSI discharge pressure). This is similar to the RM3 design. Following the recommended original equipment manufacturer accumulator precharge pressure (Hydac 2013), it was determined that 260 gallons of accumulator volume is needed.

Table 8 lists the critical PCC components and their respective size and mass values for a 360-kW rating.

Table 8. PCC Component Size Breakdown

PCC Component Sizing			
Component Name	**Component Size**	**Unit**	**Mass [kg]**
Generator	373	kW	908
Hydraulic motor	500	cc	155
Accumulators	260	gal	9,502
Hydraulic rams	7.5”x4.7”x78”	Dp x Ds x Stroke	2,500
Filters	-	-	240
Frequency converter	373	kW	1,201
Step-up transformer	400	kW	1,590
Other (valves, couplings, and so on)	-	-	5,723
PCC enclosure	-	-	10,500

3.1.4 Foundation and Mooring Design

We used a taut mooring design to reduce the motion of the frame and improve the RM5 OSWEC design’s power performance. The design consists of four taut moorings as shown in Figure 19. The mooring stiffness was determined by selecting the value with the best device power performance based on the dominant sea state at the reference site. We chose nylon as the main material for the mooring rope because it is lightweight and relatively inexpensive. For simplicity, the present mooring line was perfectly vertical so we did not consider a horizontal reaction component to mitigate the surge motion. An advanced mooring design can be developed to further improve the design power output.

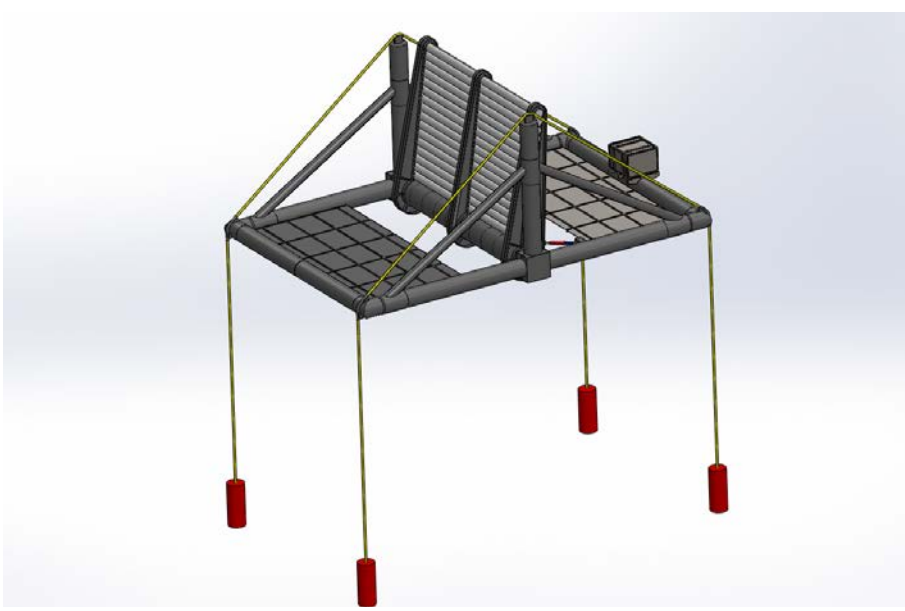

Figure 19. Mooring design for the RM5 OSWEC

Following RM4's anchor design (Neary et al. 2014), we chose a suction embedment plate anchor (SEPLA) to anchor the mooring lines in this study. SEPLA anchors have the advantage of very high holding capacity-to-weight ratios, which gives a low cost-to-performance ratio. In addition, they can be efficiently installed using a submerged pile driver.

We analyzed the baseline mooring design of RM5 OSWEC using WEC-Sim, with the flap fully submerged and locked at 45 degrees, under extreme 20% inflated 100-year return period sea states. We assumed two mooring lines and anchors per leg, and the maximum load on the mooring was about 17,000 kilonewtons (kN). The maximum mooring load was then used to determine the mooring rope design and size of the SEPLA. The simulations were performed to determine a baseline mooring design for the LCOE estimate. In reality, these anchor choices are largely driven by the sedimentation type at the reference site and the directional spreading of incoming waves. These choices need to be refined in a more detailed mooring analysis.

3.2 Manufacturing and Deployment Strategy Module

3.2.1 Manufacturing Strategy and Costs

The manufacturing costs of system components for RM5 at different array scales (1, 10, 50, and 100 units) are summarized in the figures and tables below. Figure 20 shows the cost breakdown of the device structure subcomponents, which includes the main surge frame and flap (fiberglass horizontal tube sections, two outside upright support structures, center support structure, and torque tube). Approximately two-thirds of the cost comes from the surge flap. Although there is some reduction because of volume discounts at 100-unit deployment, with a structural mass of approximately 800 tonnes, a large portion of the cost is a result of the price of raw steel.

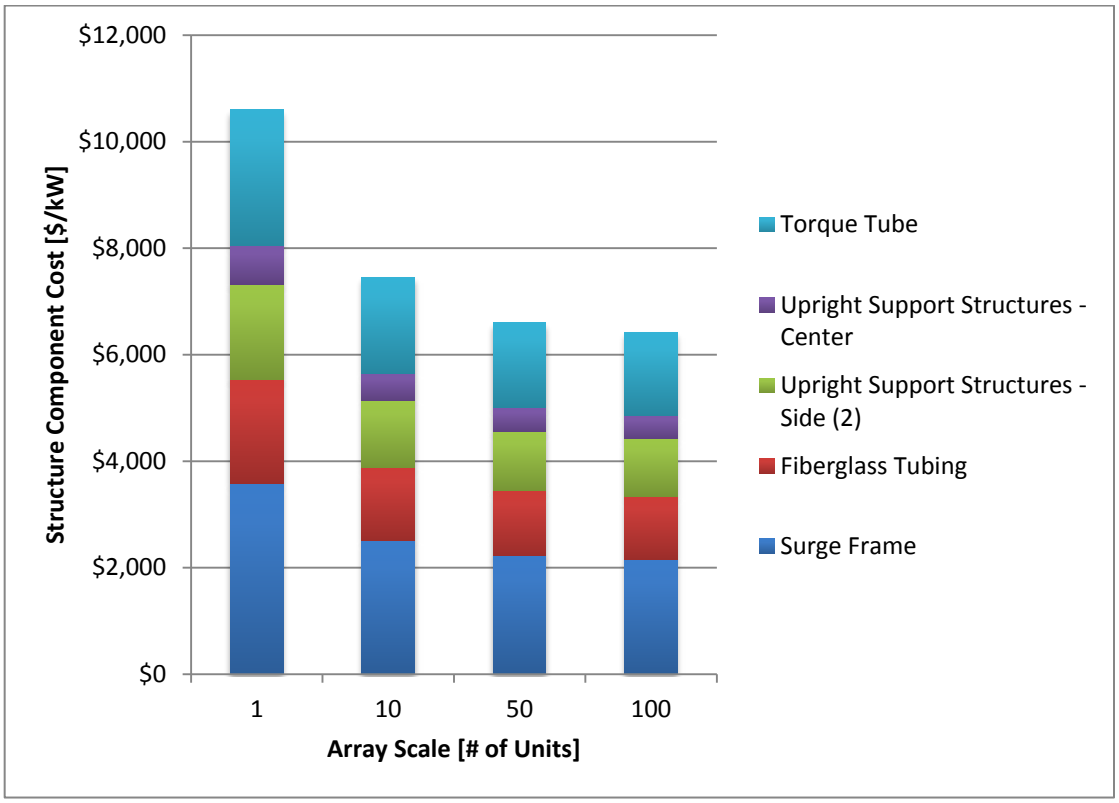

Figure 20. RM5 structural cost breakdown ($/kW) per deployment scale

Figure 21 shows the cost breakdown for the PCC components of the RM5. Because it uses a hydraulic PCC design, we expect that the majority of the PCC costs come from the hydraulic components. The cost breakdown of the PCC's hydraulic components (Figure 22) shows that approximately 80% of the cost comes from four critical components: the hydraulic reservoir, hydraulic rams, plumbing, and accumulators. Because the high operating pressure of the RM5 drives the cost of each of these components, a cost reduction may be possible with a higher flow, lower pressure PCC design. It may also be possible to significantly lower the cost by reducing the accumulators' discharge time. For example, reducing the discharge time in half, from 20 to 10 s, would also halve the cost of the accumulators.

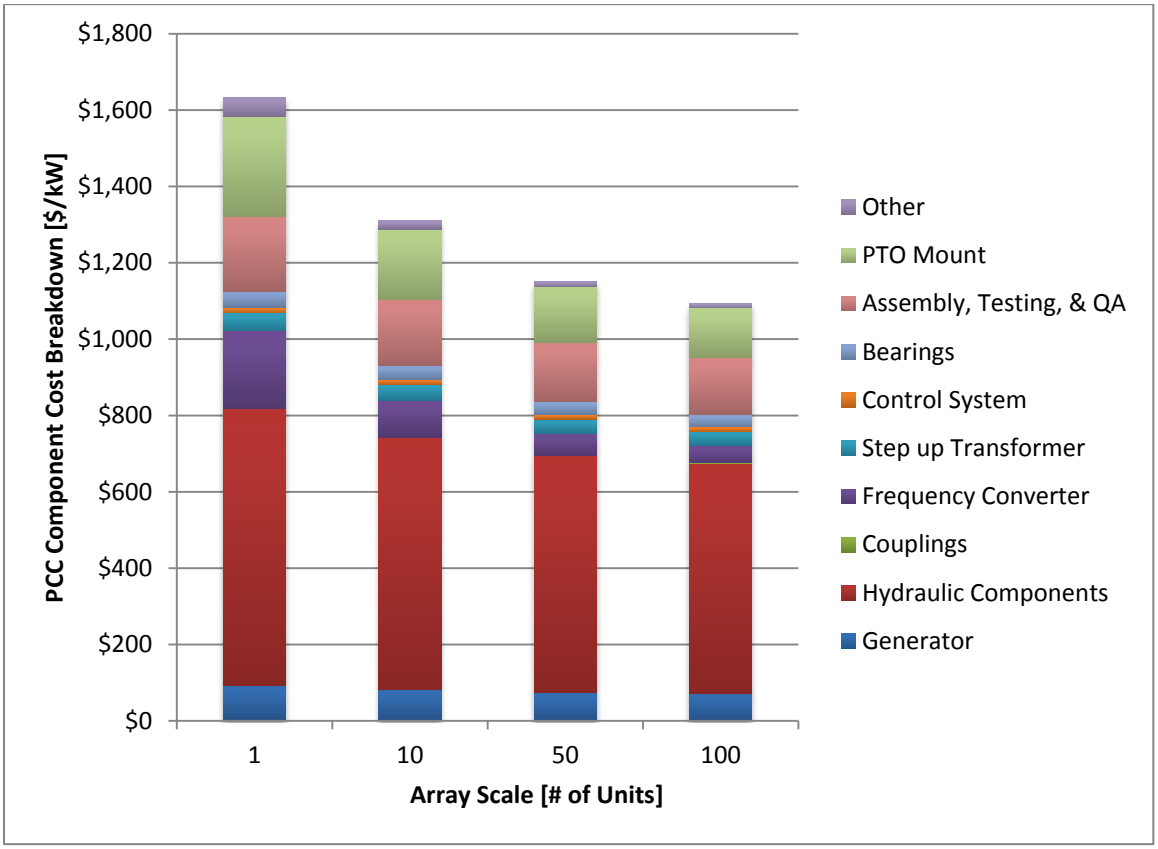

Figure 21. Cost breakdown ($/kW) for the PCC components per deployment scale

Mooring component costs, including mooring lines, chains, anchors, subsurface buoys, and hardware connections were estimated at about $1,264,000 for one device deployed as a single unit, or $728,000 per device at a deployment of 100 units. The cost of the mooring system in RM5 is dominated by the anchor's taut mooring design, which is critical for energy capture. Approximately 47% of the mooring and foundation costs are the result of anchor prices for single unit deployment. These costs decrease quickly because of the reduction in engineering and development costs as deployment moves to 10 or more units. At 10 units, anchors account for 32% of the mooring costs, and at 100 units they account for only 26%. Table 9 shows the estimated cost of the mooring system components at different deployment scales.

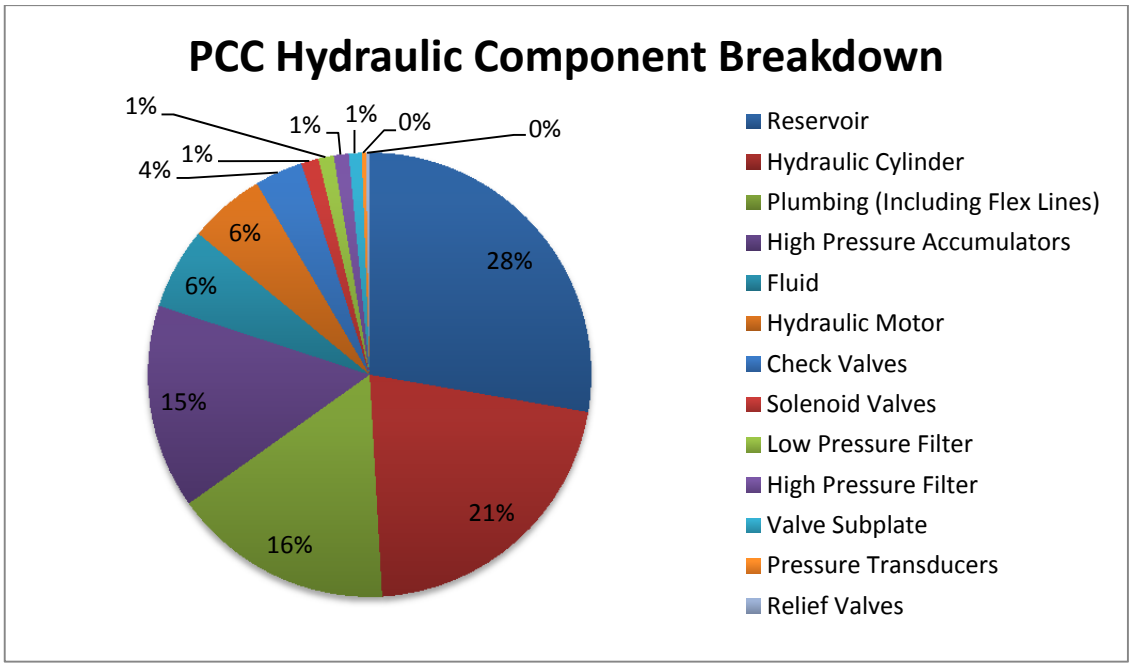

Figure 22. RM5 PCC hydraulic component breakdown

Table 9. RM5 Mooring System Component Cost Breakdown

	1-Unit Deployment [$/kW]	10-Unit Deployment [$/kW]	50-Unit Deployment [$/kW]	100-Unit Deployment [$/kW]
Mooring lines/chain	$974	$877	$877	$877
Polyester line	$899	$809	$809	$809
Wire rope to subsea buoys	$75	$67	$67	$67
Anchors	$2,084	$1,030	$805	$737
Buoyancy	$167	$150	$150	$150
Connecting hardware	$284	$256	$256	$256
Total	$4,482	$3,189	$2,963	$2,896

3.2.2 Deployment Strategy and Costs

The deployment strategy for the RM5 is similar to the one prescribed for the RM3 (Neary et al. 2014) and accounts for the installation of the mooring system, subsea cable infrastructure, and the devices themselves (including commissioning). Because the masses of the RM5 and RM3 are comparable, the same "DP-2 class vessels" that were specified for the RM3 installation (Neary et al. 2014) are assumed for the RM5. We assumed that the vessel would be mobilized from the Gulf of Mexico region and used for the mooring installation. A separate cable installation vessel

would be used for installing the cable. The device[1] would be connected to its mooring system and commissioned using the same workboat/custom service vessel that will be used for operation and maintenance (O&M) activities. Because of the taught mooring line system that is specified for the RM5, there is significantly less mooring line length than what was prescribed for the RM3. Therefore, the vessel used for the RM3 was assumed for cable installation.

Table 10 lists the total installation costs using the assumed day rates for these three types of vessels and the assumed durations for the key steps in the process.

Table 10. RM5 Manufacturing and Deployment Strategy Module Cost Assumptions

Operation Detail	1-Unit			10-Unit		
	No. Days	Vessel Day Rate	Cost	No. Days	Vessel Day Rate	Cost
Mooring Installation (DP-2 Vessel)						
Transit (5,000 miles)	68.7	$58,754	$4,039,062	68.7	$58,754	$4,039,062
Mob/demob of vessels	4.0		$422,000	4.0		$422,000
Dockside support			$7,350			$735,000
At dock landing	0.4	$70,485	$26,079	3.7	$70,485	$258,445
Transit to site and back	0.4	$76,610	$27,580	3.6	$76,610	$275,796
On-site working	0.4	$73,810	$27,310	3.7	$73,810	$270,637
Total	**74**	**$279,659**	**$4,549,381**	**84**	**$279,659**	**$6,000,940**
Cable Shore Landing						
Horizontal drilling			$667,000			$767,200
Cable Installation (Using Cable Install Vessel)						
Mob/demob cable install vessel	11.0	$66,350	$729,850	11.0	$66,350	$729,850
Load cable	0.7	$75,625	$53,694	3.4	$75,625	$257,125
Transit to site	2.0	$101,275	$202,550	2.0	$101,275	$202,550
Install cable and surface lay	0.6	$101,075	$55,591	5.5	$101,075	$555,913
Cable burial and excavation	3.1	$101,075	$313,333	3.1	$101,075	$313,333
Contingency	1.7	$87,855	$152,516	2.5	$87,855	$221,395
Total	**19**	**$533,255**	**$1,507,534**	**28**	**$533,255**	**$2,280,165**
Device Installation (Same Workboat Used for O&M)						
Mob/demob			$181,750			$181,750
Installation	1.0	$66,775	$66,775	10.0	$66,775	$667,750
Contingency	0.1	$66,775	$6,678	1.0	$66,775	$66,775
Total	**1**	**$133,550**	**$255,203**	**11**	**$133,550**	**$916,275**

[1] This analysis assumed devices could be assembled in a suitable fabrication facility in Oregon and barged down to the installation site about 300 miles south.

Figure 23 shows the total installation cost normalized by installed power at different deployment scales. The single unit deployment cost is dominated by the cost of installing the mooring system and the cable shore landing. The dollars per kilowatt ($/kW) cost of installation is significantly higher for the deployment of a single unit (about $16,000/kW) than for an array (about $2,500/kW for a 10-unit deployment and just over $1,000/kW for a 100-unit deployment).

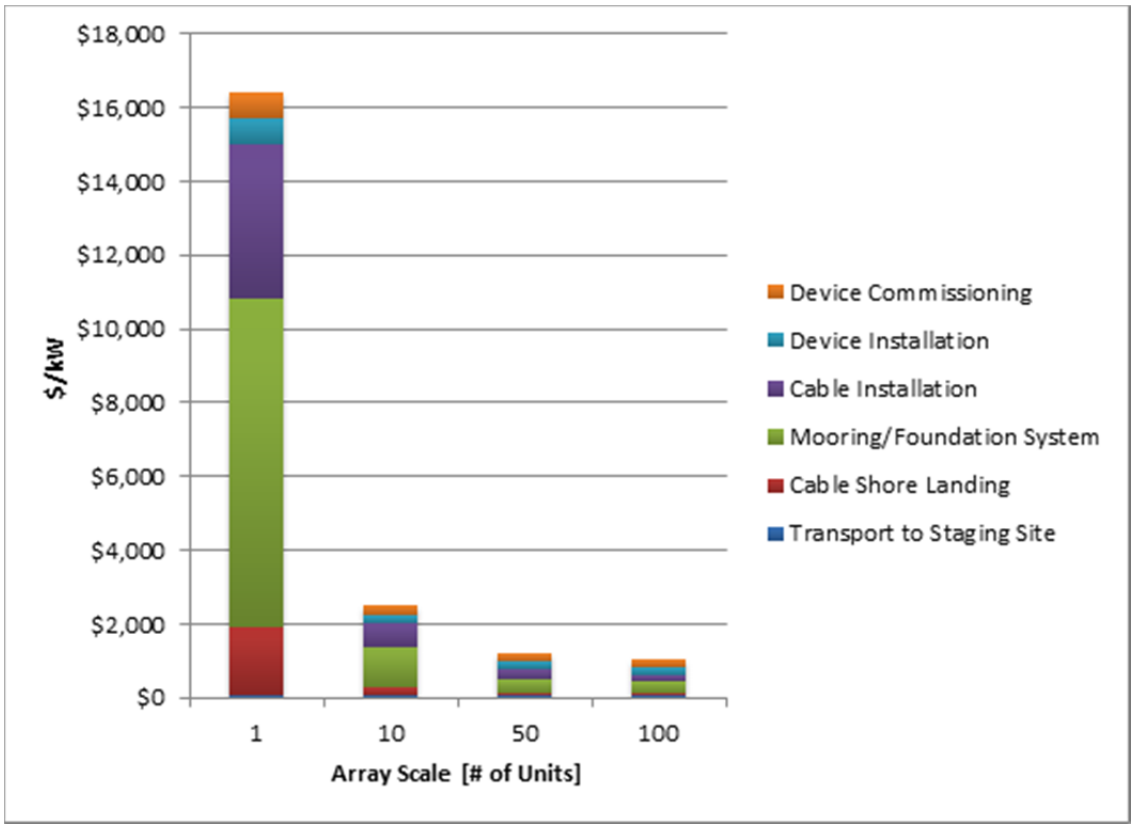

Figure 23. Installation cost breakdown ($/kW) per deployment scale

3.3 Operation and Maintenance

3.3.1 Service Vessel Specifications

Like other wave reference models, we assumed that a dedicated service vessel would become feasible with larger unit deployment. The workboat specified for the RM3 would likely be sufficient for typical RM5 service intervals. The boat shown in Figure 24 represents a similar workboat that would be used for service and installation. The figure shows the boat pulling an offshore wind platform that is similar in size to a WEC device. The requirements for the vessel are: 1) sufficient deck space to handle mooring lines and cable repair; 2) dynamic positioning (DP-1) to allow for more effective operation; and 3) crane lifting capacity of 5 tonnes at a 20-foot radius. Total cost estimates for a new RM3 service vessel range from $4M to $5.5M. Although the mass of the RM3 and RM5 is similar, we assumed the conservative estimate of $5.5M to account for the larger crane capacity that would be required for the RM5's PCC removal. A crew of about 10 would be required to operate the vessel and carry out repair and maintenance activities. Operations would take place only during daylight hours (12 hours per

day) and the vessel would return to port at night. The cost of marine operations is based on the number of interventions and the cost of the vessels used.

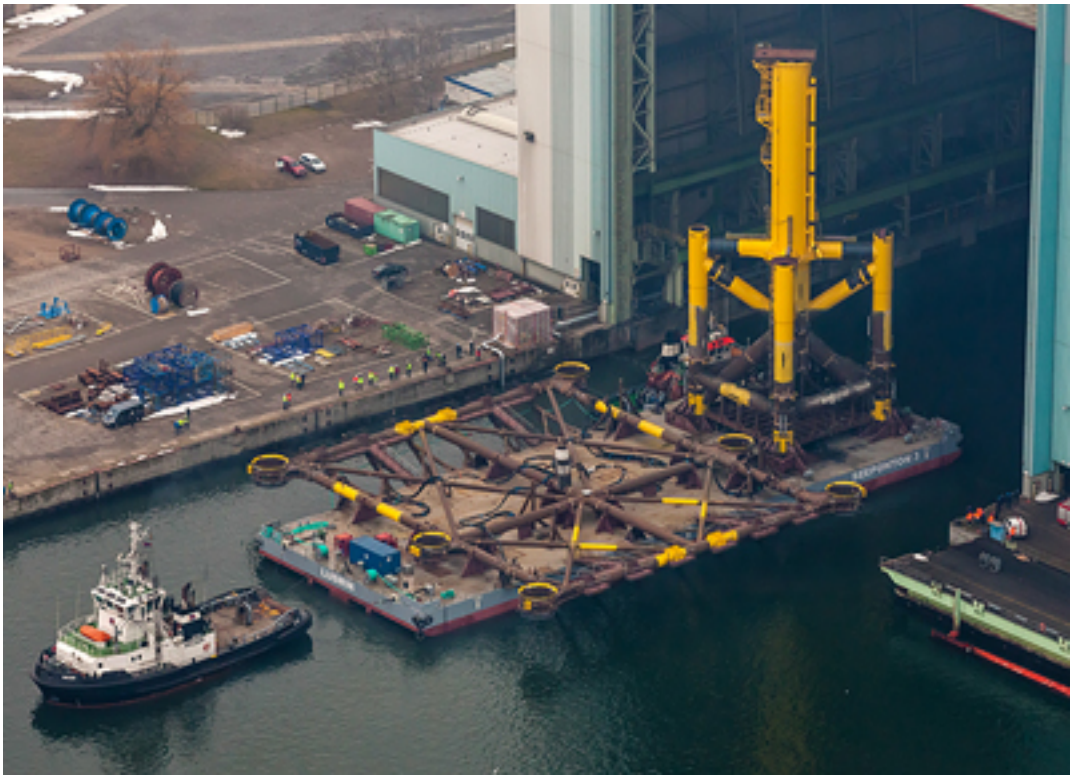

Figure 24. An example of a medium-sized workboat
(*Photo from Siemens AG, NREL 27837*)

Based on the failure rate assumptions (see Section 3.3.2) and operational frequency, we found that the device would require a total of two interventions per year. There are two major types of interventions: those requiring device recovery and those requiring only PCC recovery. The vessel day rates are the same for both types of interventions with the exception of the cost of fuel and consumables; the rate is higher for PCC removal. It is assumed that PCC retrieval requires either three vessels or a single vessel with three times the capacity of the vessel used in the RM3 project. The operational cost would be expected to drop if the WEC plant used a custom-built service vessel that was purchased as part of the project, rather than employing a vessel of opportunity.

3.3.2 Failure Rates

Table 11 provides first-order approximations of failure rates based on rates estimated for the RM3. The mean failure rate (L50) was assumed to be the mean time before the subsystem required complete replacement. Only components that would not require complete device retrieval were considered for replacement. The cost of replacement parts was assumed to equal the value of the part/subsystem of the original device. Annual replacement part costs were calculated from the part cost and the estimated number of failures per year (Table 11).

Table 11. Cost and Failure Rate Assumptions for WEC Components (Ten-Unit Cost)

Ten-Unit Device Failure Rates					
	$/Unit	# Units	L50	$/Year	# Failures/Year
Hydraulic System					
Hydraulic cylinder	$25,532	2	8	$6,382.88	0.13
Hydraulic motor	$13,222	1	5	$2,644.34	0.20
High-pressure accumulators	$2,726	13	12	$2,953.45	0.08
Relief valves	$162	4	5	$129.85	0.20
Check valves	$1,049	8			
Solenoid valves	$3,051	1			
Valve subplate	$2,241	1			
Pressure transducers	$719	1	8	$89.83	0.13
High-pressure filter	$866	3	4	$649.69	0.25
Low-pressure filter	$2,644	1	4	$661.08	0.25
Reservoir	$66,050	1			
Electrical System					
Generator	$29,115	1	10	$2,911.53	0.10
Frequency converter	$34,917	1	7.5	$4,655.63	0.13
Step-up transformer	$14,844	1	15	$989.61	0.07
Mechanical Components					
Motor-to-generator coupling	$278	1	20	$13.92	0.05
Hinge/flap bearings	$6,549	2	20	$654.89	0.05
Riser cable	$88,000	1	10	$8,800.00	0.10
Mooring	$833,021	1	50	$16,660.42	0.02
Total	**$ 1,124,986**			**$ 48,197.10**	**1.75**

3.3.3 Annual O&M Costs

Based on the estimated number of interventions and replacement part values, the annual O&M cost was computed at different scales of deployment. Figure 25 shows the breakdown of the estimated annual cost per WEC device. Increasing the unit scale of the plant would have a dramatic impact on reducing operational costs because the costs for the service vessel and the crew would increase at a slower rate as the deployment scale goes up. Insurance estimates for the RM3 were adopted for the RM5, which is a percentage of the summation of infrastructure, mooring/foundation, device structure, PCC, subsystem integration, and installation costs. It is assumed that deployment insurance is 2% for single- and 10-unit projects, 1% for 50-unit projects, and 0.5% for 100-unit projects. Note that the postinstallation monitoring is a part of the environmental monitoring and regulatory compliance cost under the environmental compliance module (see Section 3.4) and is included in the total operational expenditure (OpEx) costs. Initial

environmental compliance and monitoring activities prior to start up would fall under capital expenditures (CapEx), as explained in the following section.

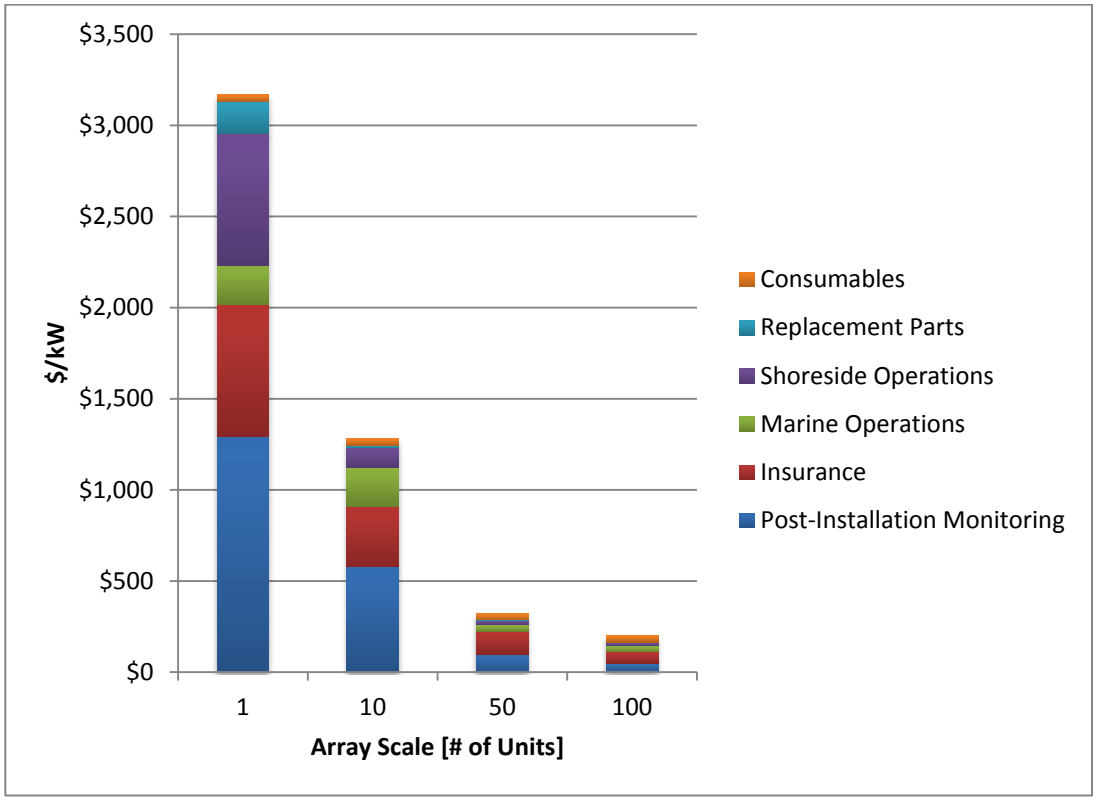

Figure 25. The RM5's annual OpEx costs ([$/kW] per array size)

3.4 Environmental Analysis and Compliance

Although the specific sites and technologies will have a major influence on the costs for any project, there are many commonalities driven by regulatory requirements and information needs. For the RM1, RM2, and RM3, PNNL researchers derived cost ranges using the best available information from existing and planned marine and hydrokinetic projects by consulting with developers and the consultants supporting them. In this report, we have also relied on the best professional judgment of researchers and natural resource management agency staff. For the RM5 (surge WEC), the basis for the costs of environmental studies and processes were developed through extrapolation from the previous three models. Even though the surge WEC model differs considerably from the RM3 (point absorber WEC) in size, mooring, and operation, the two devices have similar potential for animal interaction. The impact of anchors and mooring lines on marine habitats in the RM5 is analogous to that of the lines and anchors proposed for the RM3. Because of the similar ocean space occupied by the RM5, the National Environmental Policy Act (NEPA) processes and study costs can be extrapolated using information from other near-shore marine and hydrokinetic projects, and in consultation with experts in the area (Polyage et al. 2011).

In the RM5 project, the design strategy was altered because of environmental permitting and regulation concerns. The original OSWEC design proposed in the reference model project was a fixed-bottom system, in which the flap rotated around a frame rigidly connected to the seabed.

From the power generation performance point of view, the fixed-bottom OSWEC designs have better power generation performance (Yu et al. 2014); however, the design was changed to a floating system before significant engineering or cost analysis was conducted, based on concerns raised by the environmental assessment (Copping et al. 2014). The potential risk to the marine environment from the devices could have a significant effect on near-shore marine animals, habitats, and ecosystem processes, particularly for a commercial-scale deployment in shallow water (10- to 20-m water depth) with a sandy bottom, where shoreline sediment drift and shore-form creation also depends on the incoming waves. As commercial feasibility was central to this project, the OSWEC design was changed to a floating system.

Costs for each of the RM5 studies and processes have been developed for pilot and commercial projects, as described. Although the size of a pilot project differs from one technology and location to another, we have assumed that the RM5 pilot project consists of one device, totaling less than 5 MW of generation capacity, and could be deployed for up to 5 years. The scaling rules used in the RM1–4 projects were applied to the RM5 to generate a range of costs for both small and large commercial-scale projects (10 and 100 devices, respectively).

Each stage of study development (e.g., scoping and siting, preinstallation assessment, and postinstallation monitoring) requires documentation and adherence to processes designed to meet regulatory requirements. These processes include conducting public meetings, filing necessary permitting paperwork, and performing periodic checks with government agencies. Our estimates account for the associated costs of these processes. It is assumed that many of the siting and permitting processes that drive costs are included under NEPA. Other regulatory drivers include the Endangered Species Act of 1973, Clean Water Act of 1977, Marine Mammal Protection Act of 1972 (as amended), Magnuson-Stevens Fishery Conservation and Management Act, and the Migratory Bird Treaty Act of 1918, as well as state and local regulatory requirements.

Table 12. RM5 Environmental Cost Summary

Information Need	Pilot		Small-Scale Commercial		Large-Scale Commercial	
	Low	High	Low	High	Low	High
Siting and scoping	$240,000	$430,000	$67,000	$105,000	$77,000	$105,000
Preinstallation studies	$846,000	$1,583,000	$770,000	$1,555,000	$595,000	$1,615,000
Postinstallation	$320,000	$610,000	$780,000	$2,460,000	$780,000	$1,860,000
NEPA and process	$725,000	$1,125,000	$70,000	$150,000	$70,000	$150,000
Total	$2,131,000	$3,748,000	$1,907,000	$3,760,000	$1,742,000	$3,820,000

The overall costs for environmental studies and associated processes required for the RM5 are summarized in Table 12. Detailed spreadsheets, references, standardized protocols, and an in-depth explanation are available for all parts of the environmental costing process for the RM5 (Copping et al. 2014). It should be noted that the costs listed here are not intended to make

recommendations about which studies should be carried out or how much they should cost, rather, they reflect cost data representative of projects carried out to date and professional judgment regarding how the costs associated with the RM5 may differ. Real-world costs may be significantly lower or higher depending on site characteristics, regulatory concerns, and stakeholder dynamics. Costs are also expected to be reduced over time. The numbers here represent a conservative estimate, and are not intended to inform study plan negotiations between developers and regulatory agencies.

Costs shown in Table 12 summarize total costs expected at the pilot phase and each commercial phase. Small- and large-scale commercial costs have been calculated under the assumption that information collected during permitting at the pilot phase would be used for permitting in the commercial phase as well, thereby achieving cost savings; these costs were calculated as incrementally adding to those of the pilot scale.

3.5 LCOE Calculation

As shown in Figure 26, the baseline commercial LCOE estimate (i.e., an array comprised of 10 units) for the RM5 device is $1.44/kWh. For an array of 100 units, this value drops to approximately $0.69/kWh. These values are based on the device's AEP, CapEx, OpEx, and prescribed fixed charge rate (FCR). Based on these values, it is critical that the device cost must decrease and/or the device performance must increase for this technology to become economically viable.

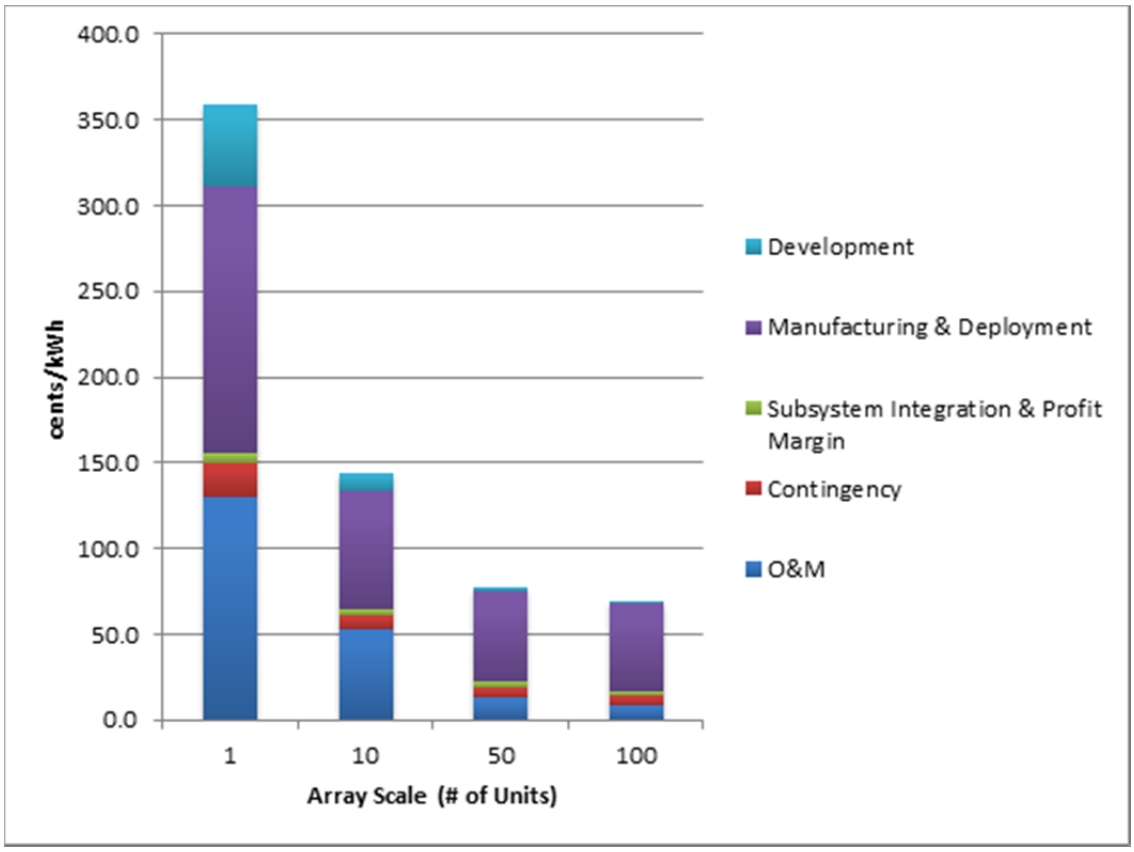

Figure 26. High-level LCOE (cents/kWh) breakdown per deployment scale for the RM5

Table 13 provides a breakdown for a commercial deployment of 10 units. The cost of manufacturing and deployment contributes 48% of the total LCOE for RM5, and O&M contributes another 36%. As expected, these two categories are the dominant cost drivers for the WEC design. To make the RM5 design cost competitive with other renewable energy technologies, it is essential to conduct research and development that is geared toward reducing the cost of manufacturing, deployment, and O&M.

Table 13. RM5 Levelized Cost of Energy Breakdown by Cost Category (Ten-Unit Array)

	cents/kWh	% of Total LCOE
Development	10.0	7.0%
Manufacturing and deployment	69.4	48.2%
Subsystem integration and profit margin	3.9	2.7%
Contingency	8.3	5.8%
O&M	52.4	36.4%
Total	144.0	100.0%

The total CapEx for single-unit deployment is estimated to be approximately $52,000/kW. This value drops to $21,000/kW for a 10-unit deployment, and $13,800/kW for a 100-unit array. Figure 27 shows the CapEx contributions to the final LCOE for the RM5. It is true that there are some cost savings associated with volume production in components such as the PCC, and installation and permitting in mooring systems; however, large cost reductions to the device structure will still need to be made even as installation and permitting costs diminish. The detailed breakdown of CapEx cost categories in terms of LCOE, as well as the percentage breakdown for a 10-unit array, is provided in Table 14.

Table 14. Breakdown of the RM5 CapEx Contributions to LCOE (Ten-Unit Array)

	cents/kWh	% of Total CapEx
Design	2.4	2.6%
Site assessment	0.4	0.4%
Permitting and environmental compliance	7.3	7.9%
Infrastructure	9.3	10.2%
Mooring/foundation	10.2	11.1%
Device structural components	32.9	35.9%
PCC	5.8	6.3%
Installation	11.1	12.2%
Subsystem integration and profit margin	3.9	4.2%
Contingency	8.3	9.1%
Total	91.6	100.0%

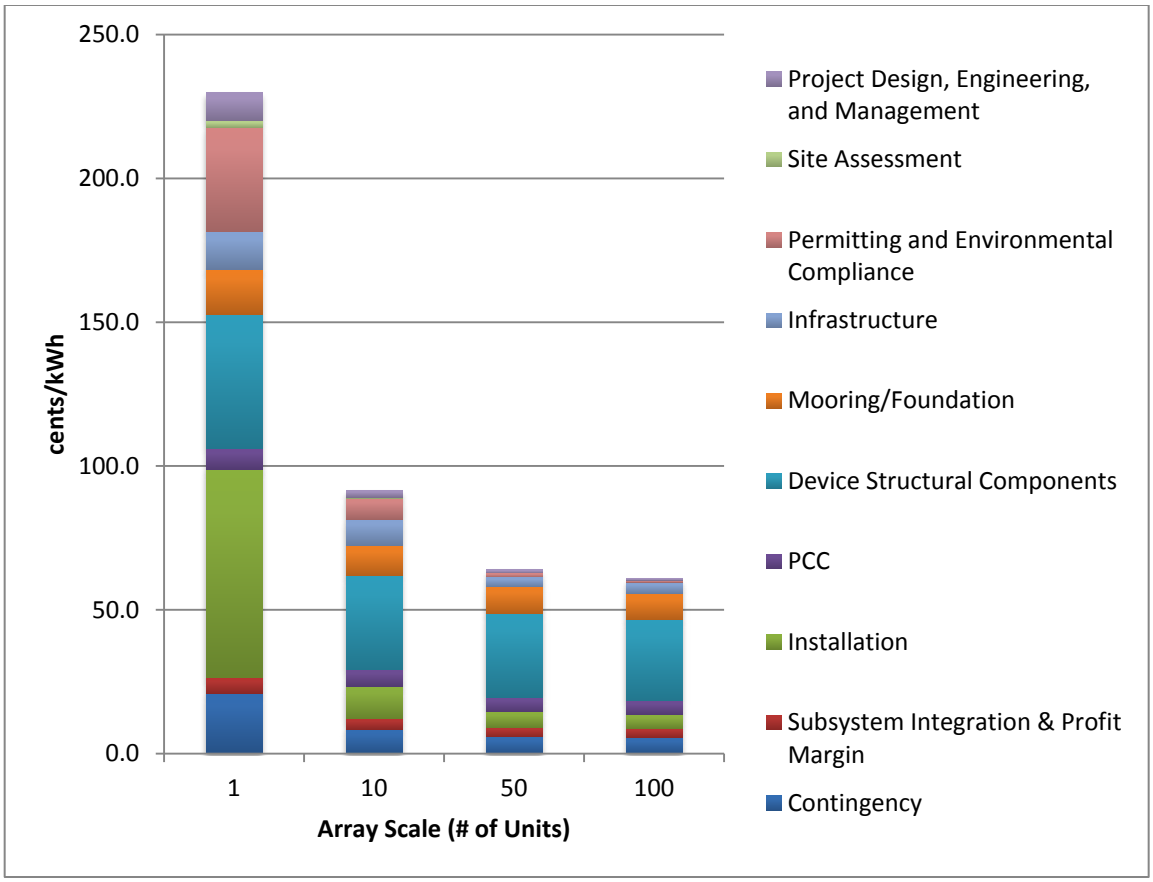

Figure 27. RM5 CapEx contributions to LCOE (cents/kWh) per deployment scale

Annual operating cost was estimated at $3,169/kW for a single unit device. The amount falls to $1,283/kW for a 10-unit array, and $202/kW for a 100-unit array. Figure 28 shows how OpEx costs contribute to the RM5 LCOE, and a breakdown of the RM5 OpEx contributions to LCOE is provided for a 10-unit array in Table 15.

Table 15. Breakdown of RM5 OpEx Contributions to LCOE (10-Unit Array)

	cents/kWh	% of Total OpEx
Marine operations	8.60	16.4%
Shoreside operations	4.54	8.7%
Replacement parts	0.55	1.0%
Consumables	1.53	2.9%
Insurance	13.55	25.9%
Postinstallation environmental monitoring	23.65	45.1%
Total	52.42	100.0%

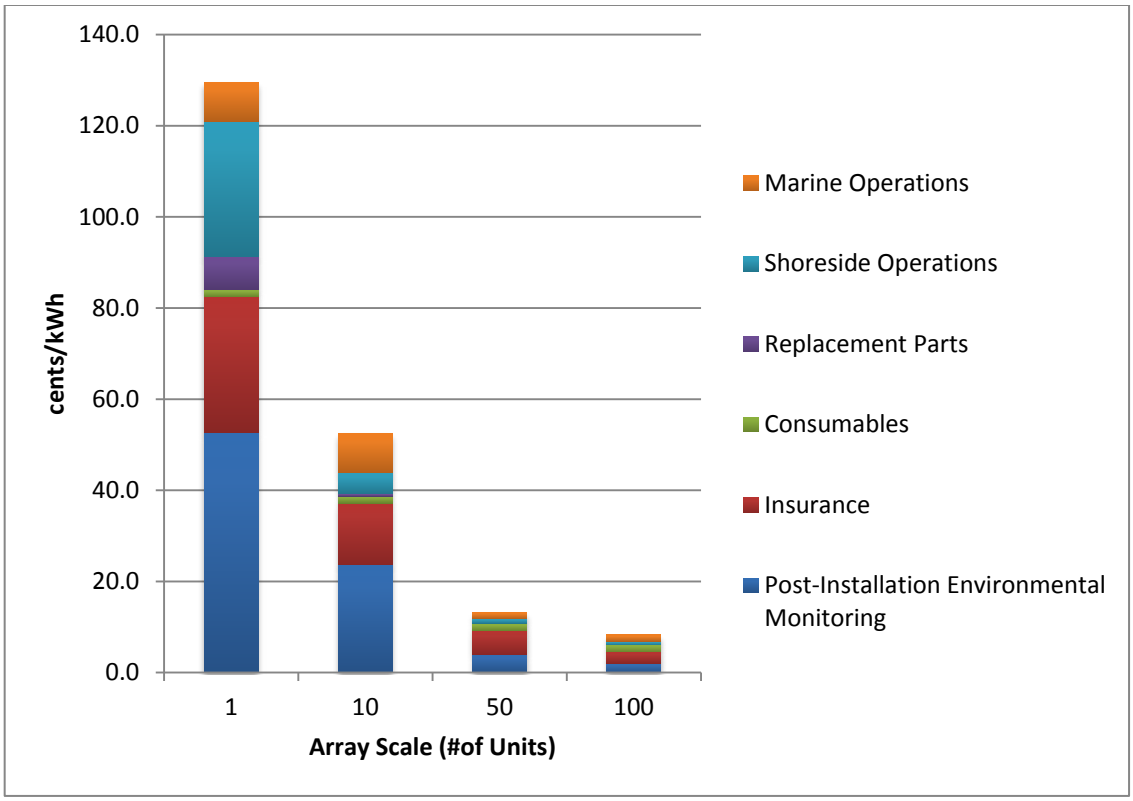

Figure 28. RM5 OpEx contributions to LCOE (cents/kWh) per deployment scale

3.6 Uncertainty in Design and Economic Analysis

The preliminary RM5 design, like all other previously presented reference model designs, has inherent uncertainties surrounding the device's performance, design, and economics. A qualitative uncertainty assessment was performed for the device design and performance, shown in Table 16. The table assigns levels of uncertainty to various aspects of the model, from low to very high, depending on whether the aspect was assessed using test/field data, modeled data, or engineering judgment. Aspects that were not addressed were assigned a "very high" level of uncertainty. Some of the categories, such as device performance, were broken into subcategories. The subcategories are represented using blue text. Device performance is broken into WEC performance, reliability, and array wake effects. Each of these categories has a different level of uncertainty because of the different levels of data availability. All categories with gray text represent the data requirements that would be mandatory for that category, implying that in the case of device performance, a validated model (e.g. tank testing and ocean testing) is required before the uncertainty can be considered low. The judged design uncertainty level for each of the categories and subcategories of the RM5 design are identified in Table 16 through cross-hatching.

Table 16. Uncertainty Matrix for RM5

Uncertainty	Device Performance	Structural Design	PCC Design	Resource Assessment	Environmental Compliance	Economic
Low	Validated model	Validated model	Validated model or original equipment manufacturer parts	**Actual data**	Actual data	Actual data
Medium	**Model simulation, no scaled test or field data- WEC performance**	**Model simulation, no scaled test or field data**	**Nonvalidated model simulation, no test data- Experience lacking submersed PCCs**	Validated model	Validated model	**Model simulation**
High	**Engineering judgment- reliability**	Engineering judgment	Engineering judgment	Engineering judgment	**Engineering judgment**	**Data from similar renewable energy technology, manufacturing and distribution, O&M**
Very High	**Issue not addressed- array wake effects**	**Issue not addressed- dynamic loads and fatigue**	Issue not addressed	Issue not addressed	Issue not addressed	Issue not addressed

Here we discuss the economic uncertainties of each cost breakdown category, for both CapEx and OpEx, in more detail. As with previous reference model devices, there is a lack of validated and public industry data for oscillating surge devices. To capture the CapEx and OpEx uncertainties, a qualitative assessment of the RM5 uncertainties was performed. A tabulated assessment of CapEx is provided in Table 17 and an OpEx assessment is provided in Table 18. A detailed description of the RM5's CapEx and OpEx uncertainties is described below:

- **Development**. PNNL has performed an initial study on environmental compliance; however, postinstallation monitoring has considerable uncertainty. Aside from postinstallation monitoring, the costs associated with preinstallation monitoring depend on site location and final array size. Until a pilot device is installed, there will be uncertainty regarding the selected designs, leading to a medium- to high-level of uncertainty.

- **Infrastructure**. Cost estimates for cables and connections were obtained based on previous reference model work. The taut mooring design used in the RM5 will enable less device movement, and therefore cable movement, but the lack of operational data results in a medium level of uncertainty. There is a high uncertainty regarding the vessel estimates because of the large mass and lack of purpose-built installation vessels. Conservative cost estimates have been utilized and it is likely that these costs can be optimized in future designs.
- **Foundation/Mooring**. There is a high level of uncertainty in the foundation and mooring estimates because of their dependency on seabed conditions. The benefits of taut mooring lines, and the associated anchor cost, will likely require optimization to maximize their performance and minimize LCOE.
- **Device Structural Components**. A high level of uncertainty on the device structure is caused by the lack of dynamic and fatigue considerations that will likely affect the final design. There is less uncertainty in the methods used to estimate the costs of the design. Fabricated steel costs, similar to those used on the RM3, were used to estimate costs for the RM5 structure.
- **PCC**. There is a medium level of uncertainty with the PCC because of the assumptions that were made regarding the hydraulic rams. Although initial performance and structural analyses were performed on the cylinders, they are not off-the-shelf components, and parametric estimations were used for cost.
- **Installation**. Installation estimates were based on time and material (vessels included) estimates. There is uncertainty regarding the specific vessels used during installation, therefore installation has been assigned a medium- to high-level of uncertainty.
- **Subsystem Integration and Profit Margin**. There is a high level of uncertainty because of a 10% factor added to the device cost.
- **Contingency**. There is a high level of uncertainty because of a 10% factor added to the device cost.
- **Decommissioning**. Decommissioning costs are assumed to have equivalent costs associated with installation, therefore they are ranked as having a medium level of uncertainty.
- **Marine Operations**. There is a high level of uncertainty when using a simplified O&M model.
- **Shoreside Operations**. There is a high level of uncertainty because of a lack of long-term performance data on fully submerged hydraulic PCCs. This lack leads to an uncertainty in failure rates and annual maintenance labor rates.
- **Replacement Parts**. Replacement part cost is based on original part cost. The high level of uncertainty is the result of an uncertainty in failure rates of submersible PCCs.
- **Consumables**. There is a high level of uncertainty around submersible hydraulic PCC systems.

- **Insurance**. Insurance is based on knowledge gained from oil and gas and offshore wind projects and therefore has a low level of uncertainty.
- **Postinstallation Environmental Monitoring**. The analysis, as performed by PNNL, led to a low- to medium-level of uncertainty. The uncertainty will be higher if a different location is selected.

Table 17. Assessment of Cost Uncertainty (CapEx)

Cost Breakdown Structure	Subcategory (If Applicable)	Result Maturity/Fidelity	Uncertainty
Development	Siting and scoping Preinstallation studies Postinstallation studies NEPA and process site assessment	Based on data from similar studies and/or engineering judgment and/or data from PNNL study	Medium to high
	Design and engineering	Technology Readiness Level 2 design and analysis	High
Infrastructure	Cables and connectors	Conceptual layout, generic hardware ID, and estimates	Medium
	Dockside and vessel	Generic for dockside and generic vessel ID	High
Foundation/ mooring	N/A	Anchor and mooring have high fluctuations based on the seabed	High
Device structural components	All	CAD designs, conceptual designs, steel cost estimates; high uncertainty is the result of dynamic and fatigue loads that are not addressed	High
PCC	All components	Primarily off-the-shelf hydraulic components, with custom hydraulic cylinders; medium uncertainty as a result of hydraulic cylinder limitations	Medium
Installation	N/A	Time and material estimates for a specific resource location (includes labor)	Medium to high
Subsystem integration and profit margin	N/A	Assumed to be 10% of machine cost	High
Contingency	N/A	Assumed to be 10% of installed capital cost	High
Decommissioning	N/A	Assumed to be the same as installation cost	Medium

Table 18. Assessment of Cost Uncertainty (OpEx)

Cost Breakdown Structure	Subcategory (If Applicable)	Result Maturity/Fidelity	Uncertainty
Marine operations	N/A	Large uncertainties with respect to maintenance and a simplified O&M model	High
Shoreside operations	N/A	Large uncertainties in failure rates for submersible, hydraulic PCC assemblies	High
Replacement parts	N/A	Limited failure rate data, based on original part cost	High
Consumables	N/A	Annual	High
Insurance	N/A	Based on offshore oil and gas projects	Low
Postinstallation environmental monitoring	N/A	Based on PNNL study	Low to medium

4 Conclusion

This report describes the design and economic analysis of a floating oscillating surge WEC using the methodology developed by Neary et al. (2014). To maintain consistency, the methodology for estimating performance and costs is similar to the methodology used for the RM3 project, including the same reference resource and cost categories; however, the RM5 is intended to represent an oscillating surge device. Caution should be taken when comparing this device with other reference model designs—the inherent variation in performance, loading, and permitting will skew final LCOE values.

The primary purpose of this study was to identify key cost drivers to focus on future research and development (R&D) efforts. Figure 29 shows that, at early development stages, a very large percentage of LCOE is the result of development costs (permitting, site assessment, and design/engineering); however, this is an area that still has large data gaps. The high uncertainties associated with the early stages of marine energy have driven the development costs up. As knowledge is gained and the industry matures, there will be opportunities to reduce development costs. It was also observed that, as the project moves to commercial scale, the device structure, PCC, and mooring/foundation become the dominant contributors. These categories not only suggest areas that can impact cost, but their ability to drive device performance. Therefore, R&D in these areas is likely to have the greatest impact on LCOE when considering WECs of this type. It should also be pointed out that the RM5, along with the previous reference model WECs, is primarily constructed of steel. Because of the inherently high loads that are seen in the ocean environment, steel is a relatively inexpensive solution to design devices, based on current technology, that can withstand the extreme loading under various sea states; however, the LCOE from WECs is not yet cost competitive with other forms of renewable energy. Nevertheless, there may be opportunities to reduce LCOE by developing innovative material that is more cost effective (in terms of the material-strength-to-cost ratio) or device designs that require less structural loading per unit of energy produced.

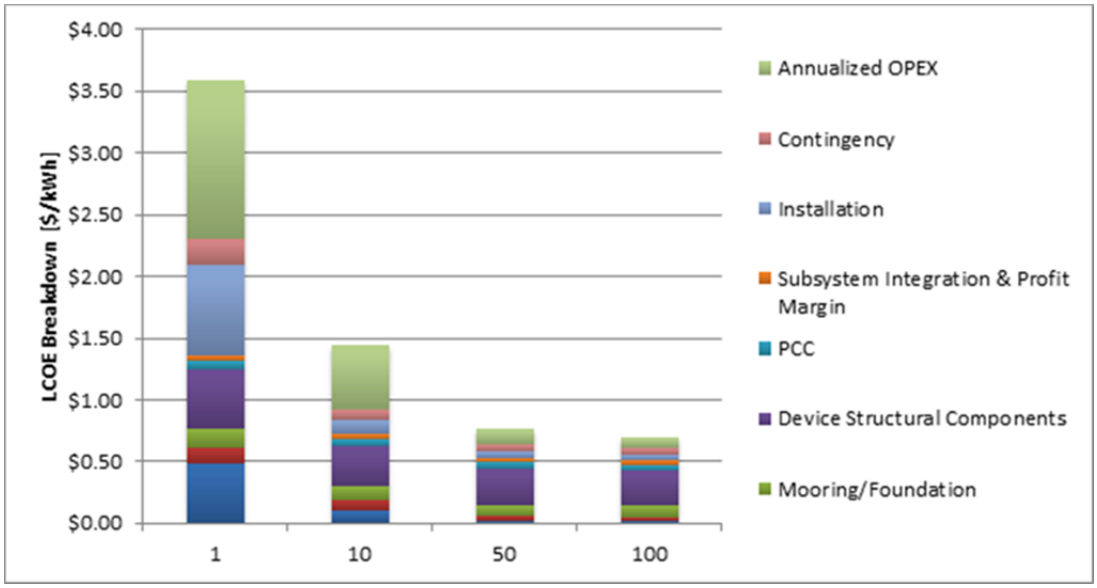

Figure 29. RM5 LCOE for 1, 10, 50, and 100 units

References

Babarit, A.; Hals, J.; Muliawan, M.J.; Kurniawan, A.; Moan, T.; Krokstad, J. (2012). "Numerical Benchmarking Study of a Selection of Wave Energy Converters." *Renewable Energy* 41:44-63. Accessed July 25, 2013: http://www.sciencedirect.com/science/article/pii/S0960148111005672.

Copping, A.; Geerlofs, S.H.; Hanna, L.A. (2014). *The Contribution of Environmental Siting and Permitting Requirements to the Cost of Energy for Wave Energy Devices: Reference Model 5*. Pacific Northwest National Laboratory (PNNL).

Cummins, W.E. (1962). *The Impulse Response Function and Ship Motions*. David Taylor Model Dasin-DTNSRDC.

Dallman, A.; Neary, V. (2014). "Initial Characterization of the Wave Resource at Several High Energy U.S. Sites." Pp. 1-7 in *2nd Marine Energy Technology Symposium Proceedings;* August 15–18, 2014, Seattle, Washington.

Dooher, B.P.; Cheslak, E.; Booth, R.; Davy, D.; Faraglia, A.; Caliendo, I.; Morimoto, G.; Herman, D. (2011). *PG&E WaveConnect Program Final*.

Hydac. (2013). "Sizing Accumulators." 92–98.

Lapeyrouse, N.J. (2002). *Formulas and Calculations for Drilling, Production, and Workover*. 2nd Edition.

Mackay, E.B.L., Challenor, P.G.; Bahaj, AB.S. (2010). "On the Use of Discrete Seasonal and Directional Models for the Estimation of Extreme Wave Conditions." *Ocean Engineering* 37(5-6):425-42. Accessed October 27, 2011: http://www.gl-garradhassan.com/assets/downloads/On_the_use_of_discrete_seasonal_and_directional_models_for_the_estimation.pdf.

Neary, V.S.; Previsic, M.; Jepsen, R.A.; Lawson, M.J.; Yu, Y.-H.; Copping, A.E.; Fontaine, A. A.; Hallett, K.C.; Murray, D.K. (2014). *Methodology for Design and Economic Analysis of Marine Energy Conversion (MEC) Technologies*. Albuquerque, New Mexico: Sandia National Laboratories.

Polyage, B.; Copping, A.; Kirkendall, K.; Boehlert, G.; Walker, S.; Weinstein, M.; Van Cleve, B. (2011). *Environmental Effects of Tidal Energy Development: A Scientific Workshop*. Seattle, Washington: University of Washington.

Previsic, M.; Epler, J.; Hand, M.; Heimiller, D.; Short, W.; Eurek, K. (2012). *The Future Potential of Wave Power in the United States*. RE Vision Consulting.

RenewableUK. (2010). *Channelling the Energy: A Way Forward for the UK Wave & Tidal Industry Towards 2020*.

Yu, Y-H; Lawson, M.; Nelessen, A.; Ruehl, K.; Michelen, C. (undated). "Development of a Wave-to-Wire Numerical Model for Wave Energy Converters and Application to a Point Absorber System."

Yu, Y-H; Lawson, M.; Ruehl, K.; Michelen, C. (2014). "Development and Demonstration of the WEC-Sim Wave Energy Converter Simulation Tool." in *2nd Marine Energy Technology Symposium Proceedings;* August 15–18, 2014. Seattle, Washington.

Yu, Y-H; Li, Y.; Hallett, K.; Hotimsky, C. (2014). "Design and Analysis for a Floating Oscillating Surge Wave Energy Converter" in *33rd International Conference on Ocean, Offshore and Arctic Engineering Proceedings*; June 8–13, 2014. San Francisco, California, United States: OMAE.